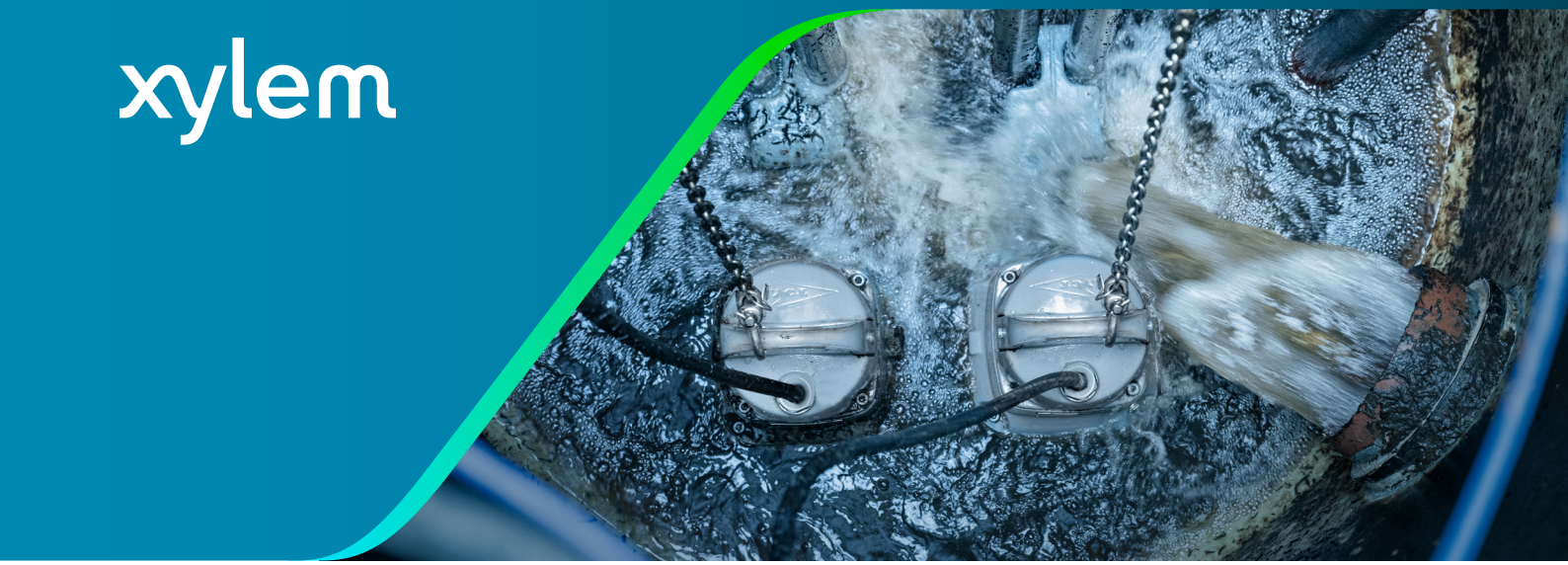

Flygt Concertor® 6030

Wastewater pumping system with built-in intelligence

Achieve clog-free, energy-efficient wastewater pumping with Xylem's Flygt Concertor.
Using advanced software functionality and state-of-the-art hardware, Flygt Concertor protects against unscheduled downtime and creates significant energy savings for your pump station.

Adaptive pump performance finds the most efficient operating point each duty cycle, while self-cleaning functionalities clear potential blockages. Integrated intelligence also makes setup and operation quick and easy.

A scalable system



Start with Concertor

Concertor N is a trouble-free, energy-efficient pump for on/off operation. Clog detection, pump cleaning, and soft start increase pump system reliability and lower operating costs.



Add Gateway

Concertor DP leverages your plant's existing process control algorithms while simplifying the adjustment of performance parameters and providing redundancy as an on/off control.



Add Xylem HMI + Nexicon®

Concertor XPC comes pre-programmed with wastewater pumping logic for lowest total cost of ownership. Continuous operational analysis minimizes energy use, and built-in sump and pipe cleaning reduce maintenance callouts.

Key features

- IE4 equivalent permanent magnet motor
- Adaptive N® hydraulic system
- Always correct impeller rotation
- Advanced cooling system
- Flygt Plug-in seal with Active Seal system
- Long-life bearings
- Thermal sensors
- Leakage sensors
- Cable cut protection

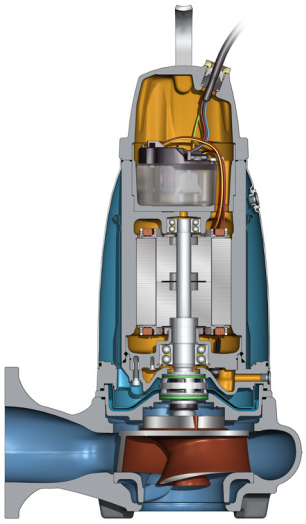

Broad performance field

Flygt Concertor operates across a broad pump performance field, eliminating the need for an exact duty point. One pump self-adjusts or can be adjusted to fit changing conditions – without having to change impeller diameters or motor sizes. Not only does this simplify selection, but your pump inventory can be significantly reduced.

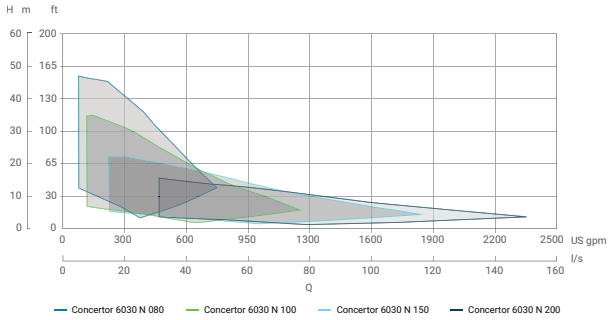

Technical data

Concertor N 6030

Motor	Synchronous (concentrated winding) Permanent magnet rotor IE4 efficiency according to IEC/TS 60034-30-2 Ed. 1
Frequency	50, 60 Hz
Voltage/Rated Power	400-480 V / 11, 14, 18 Hp (8.2, 10.6, 13.4 kW)
Rated ambient liquid temperature	104° F (40° C)
Hydraulic	Guide pin Adaptive N
Discharge sizes	3”, 4”, 6”, 8” (80, 100, 150, 200 mm)
Speed range	800-3000 rpm
Impeller material options	Hard-Iron Duplex stainless steel
Seal system	Plug-in seal with double mechanical seals Active Seal function
Seal material options	WCCR/WCCR RSiC/WCCR
Cooling system	Closed loop cooling
Installation	P - Portable wet well installation S - Portable free standing installation T - Vertically mounted, permanent dry well installation Z - Horizontally mounted, permanent dry well installation
Sensors	Leakage detection in inspection chamber Two independent temperature sensors
Cable	Screened Flygt SUBCAB®, with integrated control wires 30, 50, 60, 100 ft (10, 16, 20, 31 m)
Approvals	CE, CSA, UKCA

Optional pump control	Concertor DP Gateway	Concertor XPC Nexicon
Included modules	XCU 411 machine gateway	FPM 711 machine gateway XAM 912 application manager XBP 251 backplane XBS 251 backplane power supply
Expansion modules	–	XAC 411 analog I/O XDC 411 digital I/O
Power supply	+24 V	+24 V
Ports	1 USB 1 RS485 1 Ethernet (IPv4) 1 Display interface, CAN	1 USB 2 RS485 1 Ethernet (IPv4)
Communication protocols	Modbus RTU/TCP	Modbus RTU/TCP, DNP3, IEC-104
User interface	HMI (optional)	HMI
Environment class	Protection class: NEMA 1 (IP20) Operation temperature: -4° to +149°F (-20° to +65°C)	Protection class: IP20 Operation temperature: -4° to +140°F (-20° to +60°C)
Approvals	CE, UL, CSA, RCM	CE, UL, CSA, RCM, UKCA
Cybersecurity standards	–	ISA/IEC 62443-4-1
Built-in functions	Soft stop Trip auto-reset Status and history log Emergency run input External speed control	Soft stop Trip auto-reset Status and history log Emergency run input Set-up wizard Manage up to 4 pumps/station Energy minimizer Sump cleaning Pipe cleaning

All information presented herein is believed reliable and in accordance with accepted engineering practices. Xylem makes no warranties as to the completeness of this information. Users are responsible for evaluating individual product suitability for specific applications. Xylem assumes no liability whatsoever for any special, indirect or consequential damages arising from the sale, resale or misuse of its products. Subject to change without notice.

© 2024-2026 Xylem Inc. or its affiliates. All rights reserved. Concertor, Nexicon, Adaptive N, and SUBCAB are trademarks of Xylem or one of its subsidiaries.