Looking ahead,
going beyond expectations

Ahead Beyond

EBARA

Standardised electric pumps

Product Catalogue





Japanese Technology since 1912

www.ebaraeurope.com

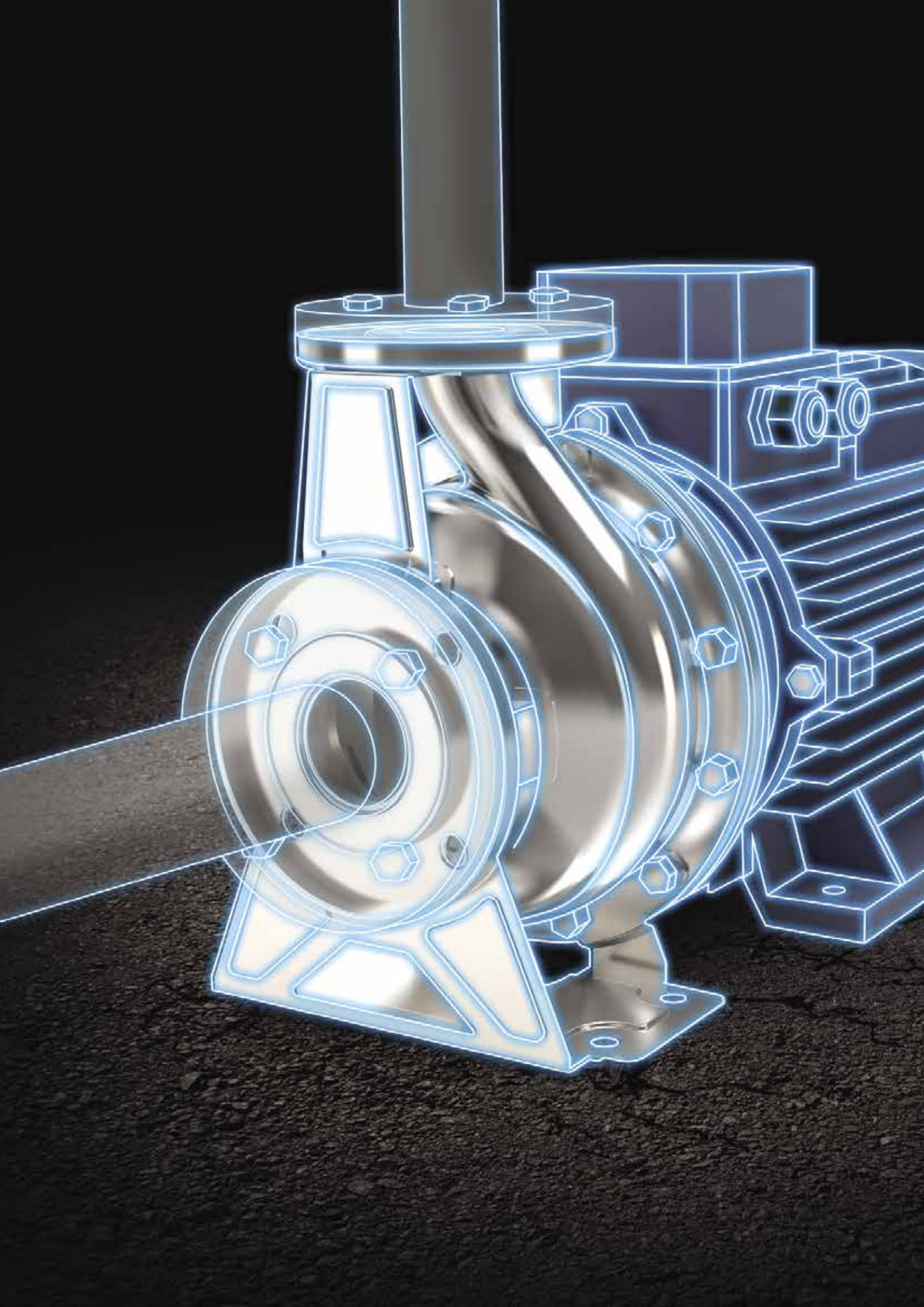

Extraordinarily standardised



The centrifugal electric pumps standardised according to the EN733 standard, with axial suction and radial discharge, are the flagship of the EBARA products.
They stand out for the quality and reliability of the individual components, for the vastness of the range and for the variety of solutions offered.

The motors available for the various models that make up the range are energy efficient 2- or 4-pole motors.
The efficiency and reliability of the pumps is improved by the possibility of using the inverter technology systems present in the EBARA range in different types, for an energy and economic saving of the entire system and an improvement of environmental sustainability.

EBARA is a fundamental partner for the supply of pumping systems.
This is why it is important to supply not only the electric pumps, but also the complementary products for the system.
EBARA offers a wide range of accessories for standardised electric pumps, including: special seals, variable speed control systems, electrical panels, vessels and floats.



Different needs, a unique range

Making a range complete means **combining** the different needs of the sectors in which the pumps will be used with **innovative**, **reliable**, **efficient** solutions to operate successfully, even in the most difficult and challenging of conditions.

The range consists of **3 SERIES**, available in AISI 304 or AISI 316 stainless steel in a monobloc versions, with a rigid joint, with a flexible joint and also in the "Z version" with adjustable foot; then there is the **3D SERIES,** standardised cast iron electric pump with AISI 304 impeller, also available with monobloc motor, rigid coupling, flexible coupling. Completing the 3D SERIES are the pumps of the **MD – MMD** series, monobloc electric pumps with elongated shaft and impeller in AISI 304 steel for the MD, and cast iron impeller for the MMD.
The **GS** electric pumps, that combine the best technical and performance characteristics in a single solution, integrate an already comprehensive range.

The use of different types of materials, the possibility of inserting special mechanical seals and at the same time the amplitude of the guaranteed performances make the standardised electric pumps a winning "team".

A complete range.



Hydroforming molding core

High efficiency is one of the main features of the standardised pumps. Not only that, also the quality of the materials, the high performance and the corrosion resistance are among the strong points. To do all this, we focused on the particular production process of the pump body: **hydroforming.**

This process uses a high pressure fluid (up to 1200 bar) for metal forming. The hydraulic fluid, in our case water, with increasing pressure pushes the stainless steel to copy the shapes of the template until it comes into contact with the internal walls of the matrix that constitutes the mold. Hydroforming, which combines the power of a press with the power of water, has significant advantages over traditional processes: **perfectly smooth**, highly **flowing** and **without welding points.**

These features thus ensure high corrosion resistance, high efficiency with **efficiency of over 80%** and reduced losses.
For high efficiency and **high performance.**

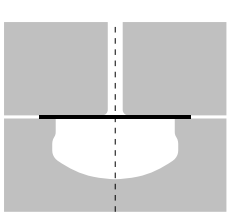

CLOSURE
The steel disc is positioned in the press

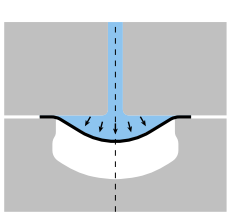

FORMING
The water is injected into the mold at a pressure of 1200 bar

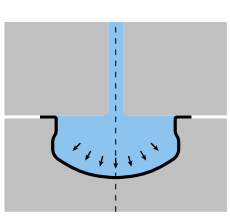

COMPLETION
The water fills the whole mold, thus deforming the steel disc

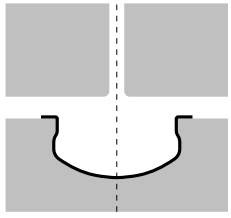

EXTRACTION
The press is raised and the pump body is formed without welding points.



Sectors and Areas of application

The range of EN733 standardised electric pumps is suitable for different types of use, from industrial applications to irrigation, from air conditioning and heating to washing systems and in all those applications that require reliability and efficiency as well as reduced cost management.



Water supply
For water supply in civil, agricultural or industrial plants



Pressurisation
For the pressurisation of water in residential, commercial, industrial and agricultural areas ensuring an efficient water supply



Fir-fighting
For the creation of fire-fighting groups compliant with the European standard UNI EN 12845



Irrigation
To make available the water necessary for crops



Washes
For the creation of washing systems used in industry (car washing machines, dishwashers, cleaning in place, sterilizing in place)



Air-conditioning
For the circulation of water in air conditioning systems



Heating
For the circulation of water in heating systems



Handling
Industrial liquid handling in process applications



Swimming pools
For water recirculation of swimming pools or of sports facilities



Refrigeration towers
For the circulation of water required in refrigeration towers



Emptying
For the emptying of tanks



Perfect interchangeability

3D SERIES - MD - MMD

Pump body made of cast iron EN-GJL-250-EN 1561 (fig. 1).

3 - 3L SERIES

The external structure has been tested at a pressure of 14 bar in a sequence of 1 million cycles, reinforced to withstand the stresses and strains of the system, high hydraulic efficiency thanks to the volute obtained by hydroforming.
Pump body made of AISI 304 for 3 SERIES and of AISI 316L for the 3L SERIES pumps, for the 65-250 pumps and the 80-160/200/250 pumps of the 3L SERIES, it is made of AISI 316 micro-cast (fig 2).

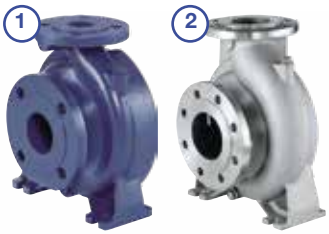



Impeller

Hydraulically balanced to prevent axial thrusts against the seal, it achieves 80% efficiency.
Made of stainless steel AISI 304 for 3 SERIES - 3D SERIES - MD, in AISI 316 for the 3L SERIES - 3D 65, in cast iron for the MMD.



3 - 3D - MD - MMD SERIES

Back pull-out design

It allows removal of the motor, the coupling, the cantilever support and the impeller without compromising the housing of the pump body or removing the pipes.

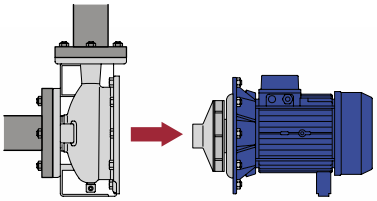



Motor

2- and 4-pole motors with high energy efficiency

Several options

The many types of mechanical seal that can be mounted on the electric pumps allow the use of special materials and therefore adapt to different needs based, for example, on the type of liquid, the temperature or other factors of use covering, depending on the models, the following temperature range:

- -10°C ÷ 90°C for versions with standard seals
- -20°C ÷ 120°C for versions with special seals

Materials available for the impeller

All the GS family models are available with cast iron or bronze impeller to ensure the best solution for various applications.

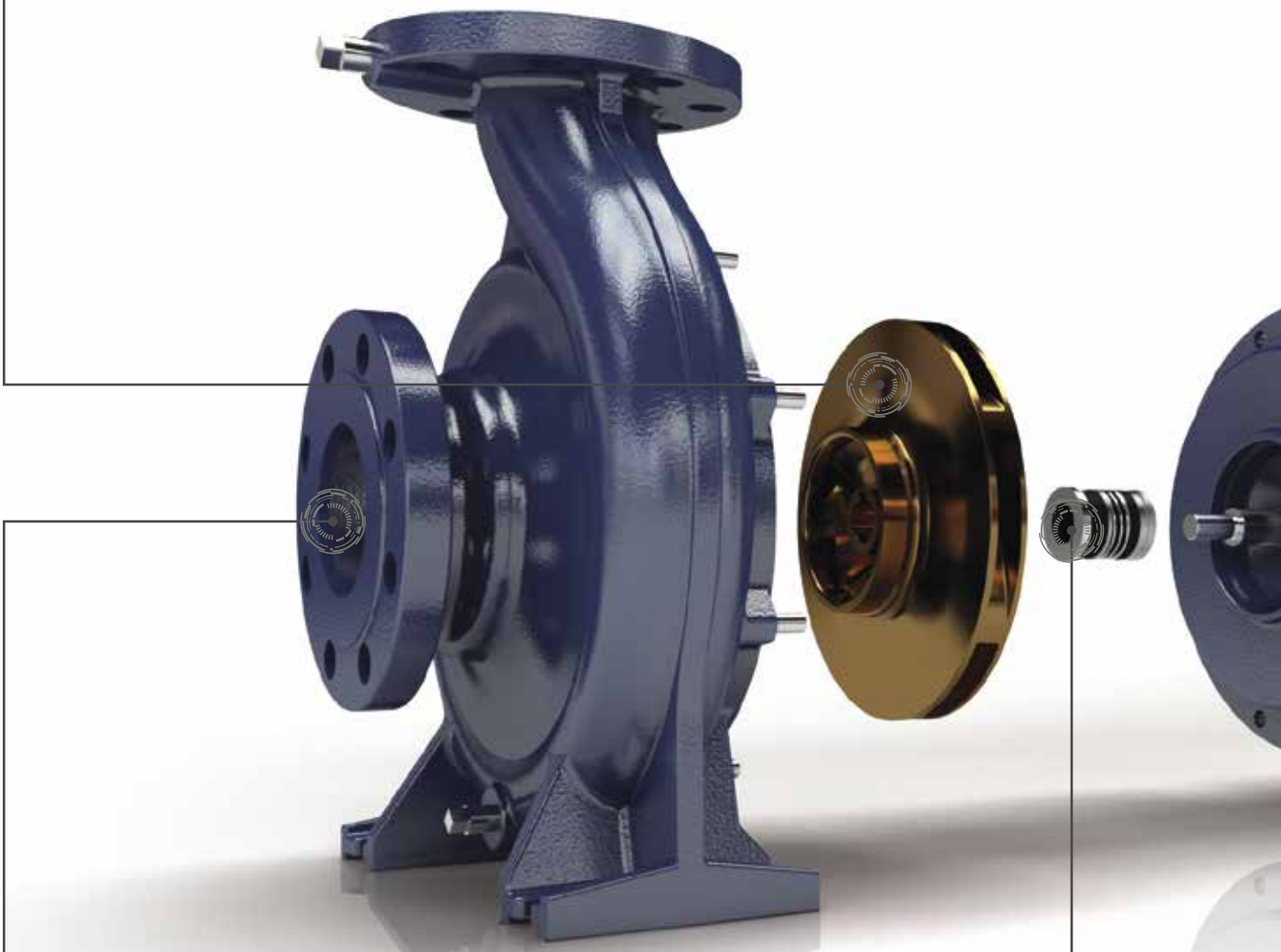

Features of the pump body

Cast iron, complying with the EN733 standard.
The flanges are PN16 (normative EN 1092-1), which makes the GS a suitable product for the heaviest and most challenging of applications.
In order to ensure reliable long-term operation and high hydraulic efficiency (MEI> 0.6), the GS models have two replaceable bronze wear rings as standard.

MODEL GS

Back pull out design and shielded bearings

This configuration ensures disassembly and inspection of the pump without having to remove it from the system piping. Furthermore, the use of shielded bearings eliminates the need to add or replace lubricating oil.
This solution facilitates and speeds up maintenance.

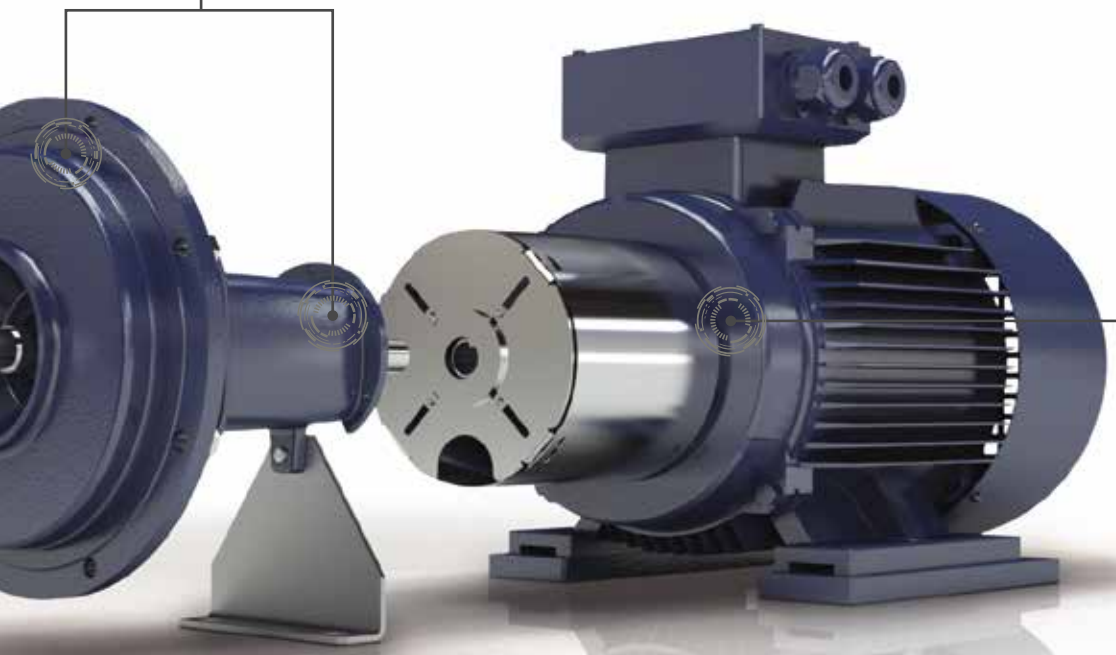

Bare axis pump and electric pump

GS models are available both in the bare axis version and in the electric pump version, with motor powers up to 355 kW. The available motors are 2 or 4 poles, 50 Hz, IE3 efficiency, coupled with inverter.

Sealing options

The seal is available in two different versions:
- SiC/Carbon/EPDM mechanics for liquid temperature up to 120°C
- A packing that guarantees resistance to wear and ensures that the tightness of the entire system is monitored visually

One range, multiple solutions

Type of product
Standardised single-stage centrifugal pumps (EN 733)

Liquid temperature range
from -10°C to + 90°C for the standard version of the 3-3D-MD-MMD SERIES (depending on the model)
from -10°C to + 120°C for the Model GS
from -20°C to + 120°C for the special versions of the 3-3D-MD SERIES (depending on the model)

Maximum working pressure
10 bar (16 for Model GS)

Materials available
Stainless steel AISI 304 for 3 SERIES
Stainless steel AISI 316L for 3L SERIES
Micro-cast stainless steel AISI 316 for the 3L SERIES 65-250, 3L SERIES 80
Cast iron for the 3D SERIES-MD-MMD e Model GS

Regulations
It complies with regulations ErP 547/2012 (index MEI > 0.4),
640/2009 (motors in IE3 efficiency class)
EN 733

	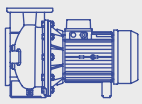 monobloc	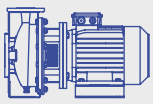 rigid joint	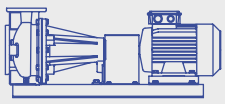 flexible joint	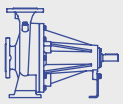 hydraulic only
3(L) SERIES				
3D SERIES				
MD - MMD				
Model GS				

2 Poles

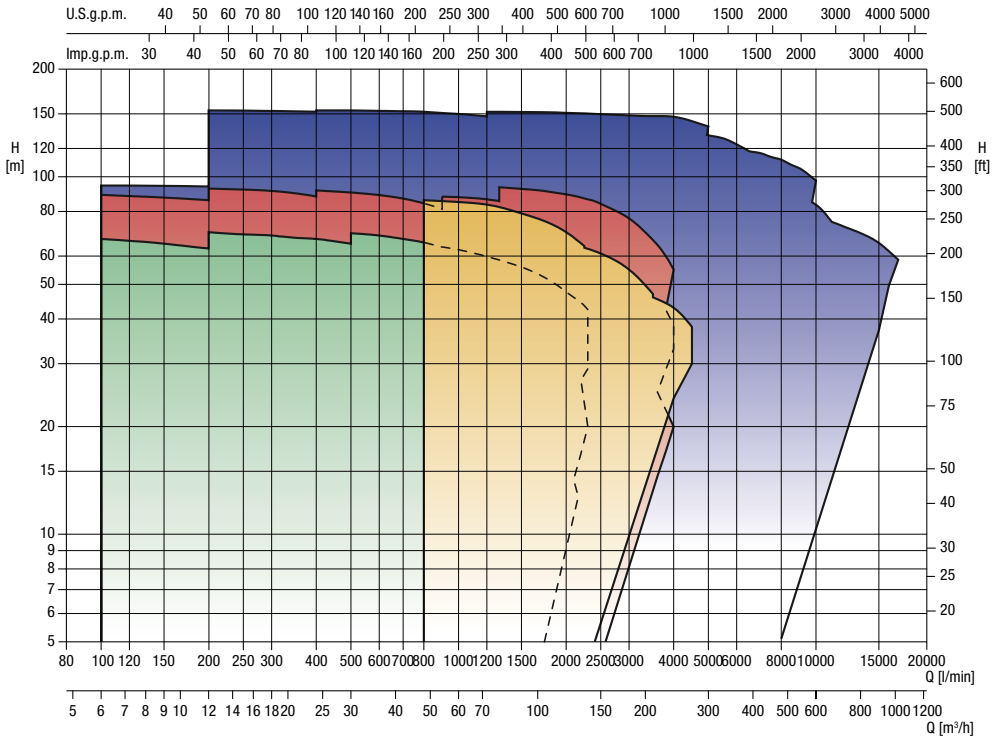

4 Poles

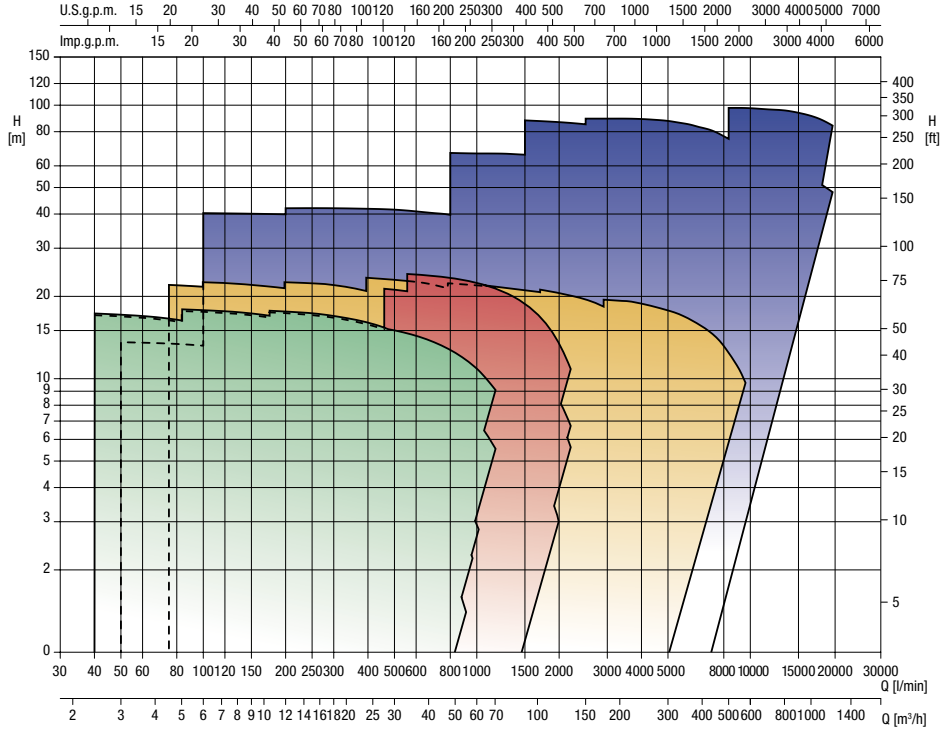

3(L) SERIES 3D SERIES MD - MMD GS

A driver for your system

Pressure or temperature variations, as well as the variation in the demand for water itself, are situations that commonly occur in water systems, whether they are civil pressurisation systems or related to irrigation or industrial uses.
Responding promptly to these variations by linking the operation of the pump to these events means **improving the efficiency** and **reliability** of the entire system.

E-SPD

E-SPD is the new inverter introduced by EBARA, with air cooling, to be installed directly on terminal box of the EBARA motors, it has all the characteristics to satisfy all customer needs.



Easy: E-SPD is easy and intuitive, with terminal box mounting and easy connection, along with the easy to use start up wizard to save time.

Flexibility: E-SPD can be adapted to EBARA centrifugal pumps including both horizontal and vertical

Versatility: E-SPD can be either mounted directly on the terminal box of ETM or EBARA branded motors, or wall mounted with the optional wall bracket

Visibility: E-SPD has a large LCD display that can indicate important performance data, system parameters and alarm notifications.

Safety: E-SPD provides both protection for the motor and the pump preventing common problems like overcurrent, overheating, voltage protection, dry running and water leaks.

Connectivity: E-SPD can offer multiple connections with 2 digital inputs and outputs as standard, along with 1 analogue input and dedicated communication port for linking up to 8 inverters for multiple pump systems.

EZ-finder, more than just a simple selector

EZ-finder, a way to look for a model of electric pump? **Much more**.
It is the ultimate tool to find and select the right product for your needs.
Thanks to the logic of the selector, it is possible to search for a product in **various ways**: according to the duty point, by entering the model name or by selecting the application type. **Simple**, the right product in seconds.
EZ-finder is the **ideal tool** available to the installer, the designer or the engineer.

Discover it at the link **https://ezfinder.ebara.com**



Everything that you need just a click away!

visit our website www.ebaraeurope.com



Data book

Complete technical documentation to be consulted to obtain all the data related to the pumps



Instruction manual

The manual with all the information needed for correct installation of our pumps



Kensaku

a system for the selection of spare parts



Ez-finder

The correct pump selection software for every need
https://ezfinder.ebara.com



Service

A team of professionals at your disposal to advise you in your choice of pump and to offer post sale assistance

EBARA sales network

EUROPE

EBARA Pumps Europe S.p.A.
Via Torri di Confine 2/1 int. C
36053 Gambellara (Vicenza), Italia
Phone +39 0444 706811
Fax +39 0444 405811
www.ebaraeurope.com

Italian Sales (for order only):
e-mail: ordini@ebaraeurope.com

Export Sales (for order only):
e-mail: exportsales@ebaraeurope.com

Technical Customer Service (TCS):
e-mail: tcs@ebaraeurope.com
Phone +39 0444 706869/902/923/833

EBARA Pumps Europe S.p.A. GERMANY
Elisabeth-Selbert-Straße 2
63110 Rodgau, Germany
Phone +49 (0) 6106-660 99-0
Fax +49 (0) 6106-660 99-45
e-mail: info@ebara.de

EBARA Pumps Europe S.p.A. UNITED KINGDOM
Unit A, Park 34
Collett Way - Didcot
Oxfordshire - OX11 7WB, United Kingdom
Phone +44 1895 439027 - Fax +44 1235 815770
e-mail: mktguk@ebaraeurope.com

EBARA Pumps Europe S.p.A. FRANCE
122, Rue Pasteur
69780 Toussieu, France
Phone: +33 04 72 76 94 82
Fax +33 08 05 10 10 71
e-mail: mktgf@ebaraeurope.com

EBARA POMPY POLSKA Sp. z o.o.
ul. Działkowa 115 A
02-234 Warszawa, Poland
Phone +48 22 3909920
Fax +48 22 3909929
e-mail: mktgpl@ebaraeurope.com

EBARA Pumps RUS Ltd.
Prospekt Andropov 18, building 7, floor 11
115432 Moscow
Phone +7 499 6830133
e-mail: mktgrus@ebaraeurope.com

EBARA PUMPS IBERIA, S.A.
Poligono Ind. La Estación
C/Cormoranes 6-8
28320 Pinto (Madrid), Spain
Phone +34 916.923.630
Fax +34 916.910.818
e-mail: marketing@ebara.es

MIDDLE EAST

EBARA Pumps Middle East FZE
P.O.BOX 61383
Jebel Ali, Dubai, UAE
Phone +971 4 8838889
Fax +971 4 8835307
e-mail: info@ebarame.ae

EBARA PUMPS SAUDI ARABIA LLC
St. 98, Dammam Second Industrial City, P.O.Box. 9210,
Dammam 34333, Kingdom of Saudi Arabia
Phone 966-138022014

ASIA & SOUTHEAST ASIA

EBARA Corporation
11-1, Haneda Asahi-cho, Ohta-ku,
Tokyo 144-8510, Japan
Phone +81 3 3743-6111
Fax +81 3 5736 3100
www.ebara.co.jp

EBARA Corporation Fujisawa plant
4-2-1, Hon-Fujisawa, Fujisawa-shi.
Kanagawa 251-8502, Japan
Phone +81-466-83-8111
Fax +81-466-81-2164

EBARA Machinery (CHINA) CO.,Ltd.
Room No.303, Beijing Fortune Plaza,
No.7 Dongsanhuan Zhong Road, Chaoyang District
Beijing, 100020 P. R. China
Phone 86-10-65309996
Fax 86-10-6530-8968
e-mail: emc@ebare.cn
www.ebara.cn

EBARA Densan (Qingdao) Technology Co., Ltd.
No.88, Wangsha Road, Chengyang Qingdao,
Shandong Province, P.R.China
Phone 86-532-8965-3382
Fax 86-532-8965-3379
www.edq-ebara.com

EBARA-Densan Taiwan Manufacturing Co., Ltd.
No.7, Nan-Yuen 2nd Road, Chung Li City,
Tao Yuen Hsien, Taiwan
Phone 886-3-451-5881
Fax 886-3-452-7904
www.ebara.com.tw

EBARA Thailand Limited
3rd Floor Achme Build. 125 Phetchburi Road
Tungphayathai, Rajtheve, Bangkok 10400, Thailand
Phone 66-2-216-4935
Fax 66-2-216-4937
e-mail: info@ebara.co.th
www.ebara.co.th/index.php/en/

EBARA Fluid Machinery Korea Co., Ltd.
3rd Fl. Hyun-Seok Tower, 50,
Seolleung-Ro 93-Gil, Gangnam-Gu
Seoul, 135-513 Korea
Phone 82 70 43621100
Fax 82 70 82302030
e-mail: nishikura.ryutaro@efmk-ebara.com

EBARA Pumps Philippines, Inc.
Canlubang Industrial Estate,
Cabuyao 4025, Laguna, Philippines
Phone 0063-49-549-1806
Fax 0063-49-549-1915
e-mail: marketing@ebaraphilippines.com
www.ebaraphilippines.com.ph

P.T. EBARA Indonesia
Jl. Raya Jakarta - Bogor Km. 32
Desa Curug, Cimanggis-Depok
Jawa Barat, 16953 Indonesia
Phone (62-21) 874 0852-53
Fax (62-21) 874 0033
e-mail: marketing@ebaraindonesia.com
www.ebaraindonesia.com

EBARA Pumps Malaysia Sdn. Bhd
6, Jalan TP3, UEP Subang Jaya Industrial Park,
47620, Subang Jaya, Selangor, Malaysia.
Phone 603-8023 6622
Fax 603-8023 9355
e-mail: sales@ebara.com.my
www.ebara.com.my

EBARA Enginering Singapore Pte. Ltd.
No 1, Tuas Link 2, Singapore 638550
Phone 65-6862-3536
Fax 65-6861-0589
e-mail: stdpump@ebrnet.com.sg
www.ebara.com.sg

EBARA MACHINERY INDIA PRIVATE LIMITED
#133, 1st Floor, Velachery Main Road, Guindy,
Chennai 600 032, India
Phone 91-755-0089388

EBARA Vietnam Pump Company Limited
Lai Cach Industrial Zone, Lai Cach Town,
Cam Giang District,
Hai Duong Province, Vietnam
Tel 84-2203-850182
Fax 84-2203-850180
e-mail: info@evpc-vn.com
www.ebarapump.com.vn/en/

AMERICA

EBARA PUMPS AMERICAS CORPORATION
1651 Cedar Line Drive
Rockhill, South Carolina, 29730 U.S.A.
Phone 803 327-5005
Fax 803 327-5097
e-mail: info@pumpsebara.com
www.pumpsebara.com

EBARA Bombas América do Sul Ltda
Rua Joaquim Marques de Figueiredo, 2-31,
Distrito Industrial, CEP 17034-290, Bauru, SP, Brasil
Phone +55 14 4009-0000
Fax +55 14 4009-0044
e-mail: assistencia@ebara.com.br
www.ebara.com.br/ebara/pt/index.php

EBARA Bombas Colombia S.A.S.
Autopista Medellin km 7 Celta Trade Park Bodega
02 Lote 116 Funza. Republica de Colombia
Phone 57-1-826-9865

AFRICA

EBARA PUMPS SOUTH AFRICA (PTY) LTD
26 Kyalami Boulevard,Kyalami Business Park,
1684, Midrand, Gauteng
South Africa
Phone: +27 11 466 1844
Fax: +27 11 466 1933

OCEANIA

EBARA Pumps Australia Pty. Ltd.
7, Holloway Drive
Bayswater 3153 Victoria, Australia
Phone 0061-3-97613033
Fax 0061-3-97613044
e-mail: berrett@ebara.com.au
sales@ebara.com.au
www.ebara.com.au/index.html



www.ebaraeurope.com

Looking ahead,
going beyond expectations

Ahead > Beyond

EBARA Pumps Europe S.p.A.
Via Torri di Confine 2/1 int. C
36053 Gambellara (Vicenza), Italy
Phone +39 0444 706811
Fax +39 0444 405811
ebara_pumps@ebaraeurope.com
www.ebaraeurope.com

EBARA Pumps Europe S.p.A. reserves the right to make changes without notice: all the specifications may be subject to change

EBARA Corporation
11-1, Haneda Asahi-cho, Ohta-ku,
Tokyo 144-8510
Japan
Phone +81 3 6275 7598
Fax +81 3 5736 3193
www.ebara.com

S.C. 232 01/20