EBARA

Japanese Technology since 1912

DWO

Data Book 50Hz

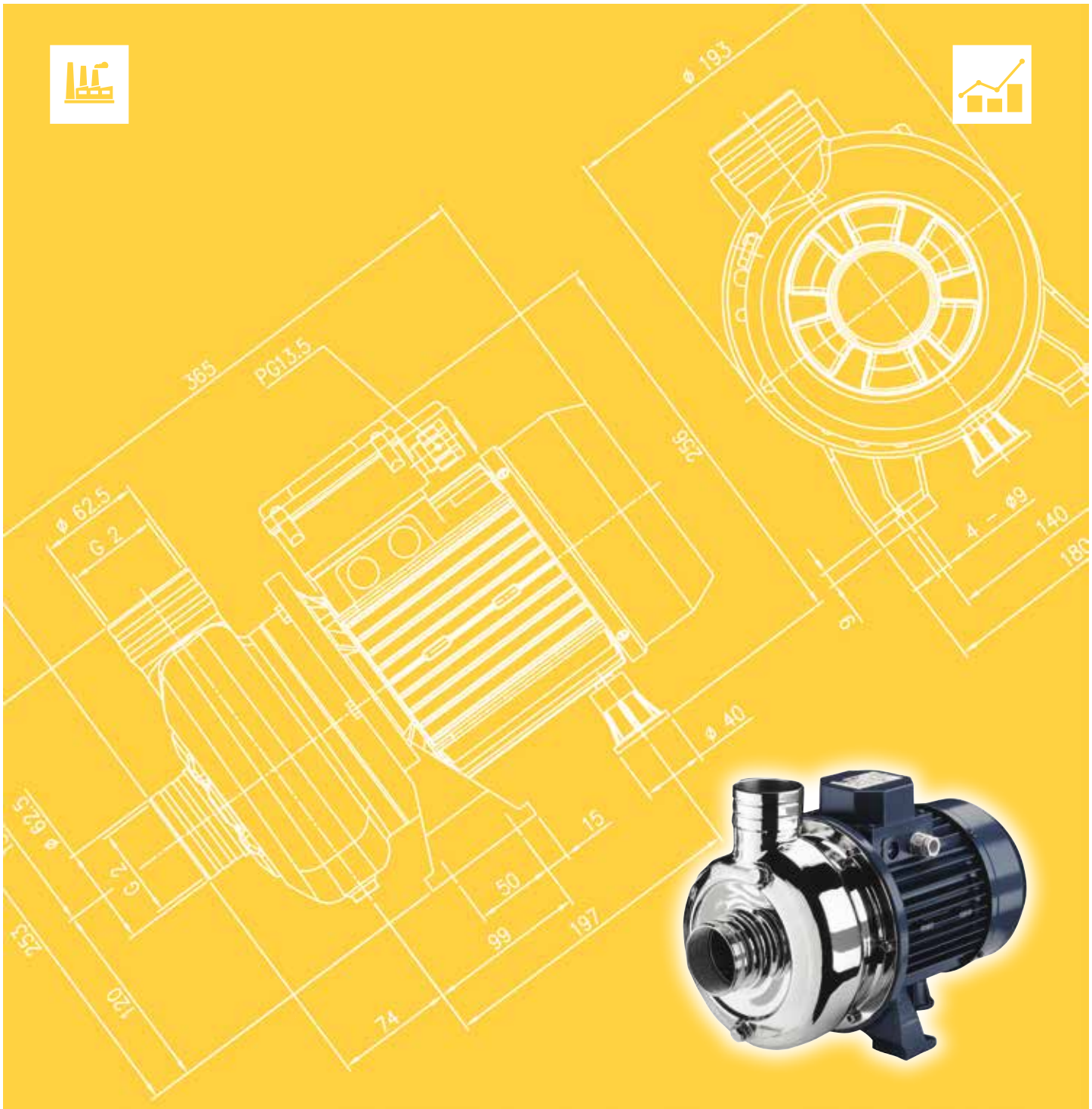

CONTENTS

50Hz

Rev.S

	Page
- SPECIFICATIONS	**200**
PERFORMANCE RANGE and SELECTION CHART	201
TYPE KEY and CURVE SPECIFICATIONS	202
PERFORMANCE CURVES DWO 150	203
PERFORMANCE CURVES DWO 200	204
PERFORMANCE CURVES DWO 300	205
PERFORMANCE CURVES DWO 400	206
- CONSTRUCTIONS	**300**
SECTIONAL VIEW	300
MECHANICAL SEAL	301
FLUID TEMPERATURE RANGE	303
BEARINGS	304
- DIMENSIONS and WEIGHT	**400**
PUMP	400
GEOMETRIC TOLERANCES	401
PACKING	402
- TECNICAL DATA	**500**
MOTOR DATA	500
NOISE DATA	500

SPECIFICATIONS 50Hz

Rev.S

PUMP			
Liquid Handled	Type of liquid		Moderate aggressive fluids, glycol solutions, liquids containing Impurities, liquids suitable for industrial washing equipments.Not suitable for clean water. For other industrial fluids please contact our Technical Customer Service.
	Temperature	[°C]	min. -5 max. +120 For full details see section “FLUID TEMPERATURE RANGE”
Maximum working pressure		[MPa]	0,8
Construction	Impeller		Open centrifugal type
	Shaft seal type		Mechanical seal
	Bearing		Sealed ball bearing
Pipe Connection	Suction		G 2 G 2½ (DWO 300-400)
	Discharge		G 2
Material	Casing		AISI 304
	Impeller		AISI 304
	Casing cover		AISI 304
	Shaft seal		Ceramic/Carbon/NBR
	Casing cover		AISI 304
	Shaft		AISI 304 (Wet extension)
	Bracket		Aluminium
Applicable standard of test			ISO 9906:2012 - Grade 3B

MOTOR			
Type		Electric - TEFC	
		Single Phase	Three Phase
Efficiency level (Reg. 1781/2019)		IE2	IE3
No. of Poles		2	
Rotation speed	[min^{-1}]	≈ 2800	
Insulation Class		F	
Protection degree(CEI EN 60034-5)		IP 55	
Power rating	[kW]	1.1 ÷ 1.8	1.1 ÷ 3
	[HP]	2 ÷ 2.4	1.5 ÷ 4
Frequency	[Hz]	50	
Voltage	[V]	230 ±10%	230/400 ±10%
Capacitor		Built in	-
Over load protection		Built in	Provided by the user
Casing material		Aluminium	
Base material/motor support		Aluminium	
Dimensions of cable entry		PG11 - PG13.5 – M20x1.5 (See DIMENSIONS TABLE page 400)	

PERFORMANCE RANGE and SELECTION CHART 50Hz

Rev.S

PERFORMANCE RANGE

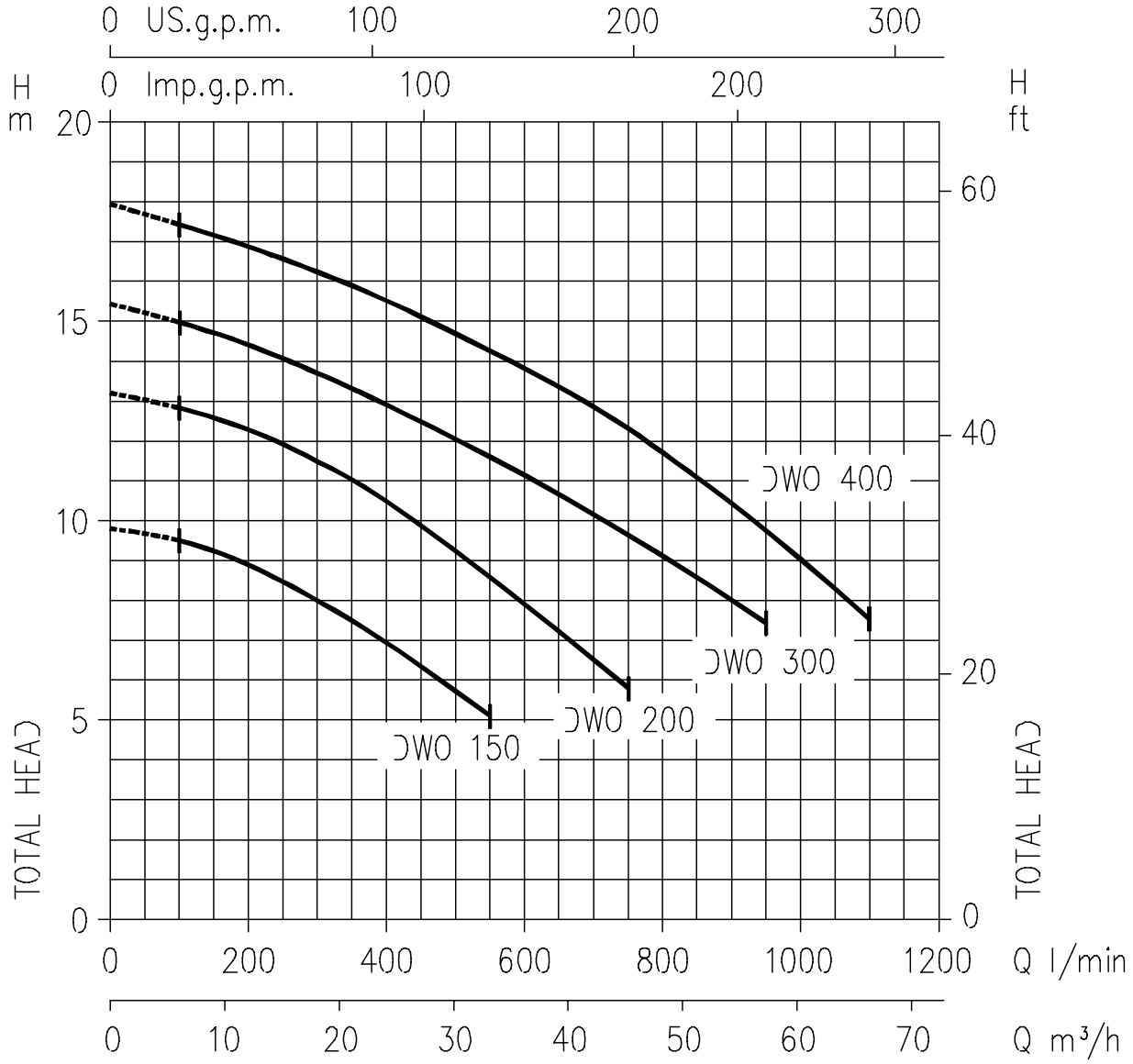

SELECTION CHART

Pump type		Q=Capacity								
		l/min	0	100	200	300	400	550	750	950	1100
Single Phase	Three Phase	m³/h	0	6	12	18	24	33	42	57	66
		H=Total manometric head in meters									
DWO 150 M	DWO 150		9,8	9,5	8,9	7,9	6,9	5,1	-	-	-
DWO 200 M	DWO 200		13,2	12,7	12,3	11,5	10,5	8,6	5,8	-	-
-	DWO 300		15,5	15	14,5	13,8	12,9	11,7	9,7	7,5	-
-	DWO 400		18	17,5	16,9	16,3	15,6	14,3	12,4	9,8	7,6

TYPE KEY and CURVES SPECIFICATIONS

50Hz

Rev.S

TYPE KEY

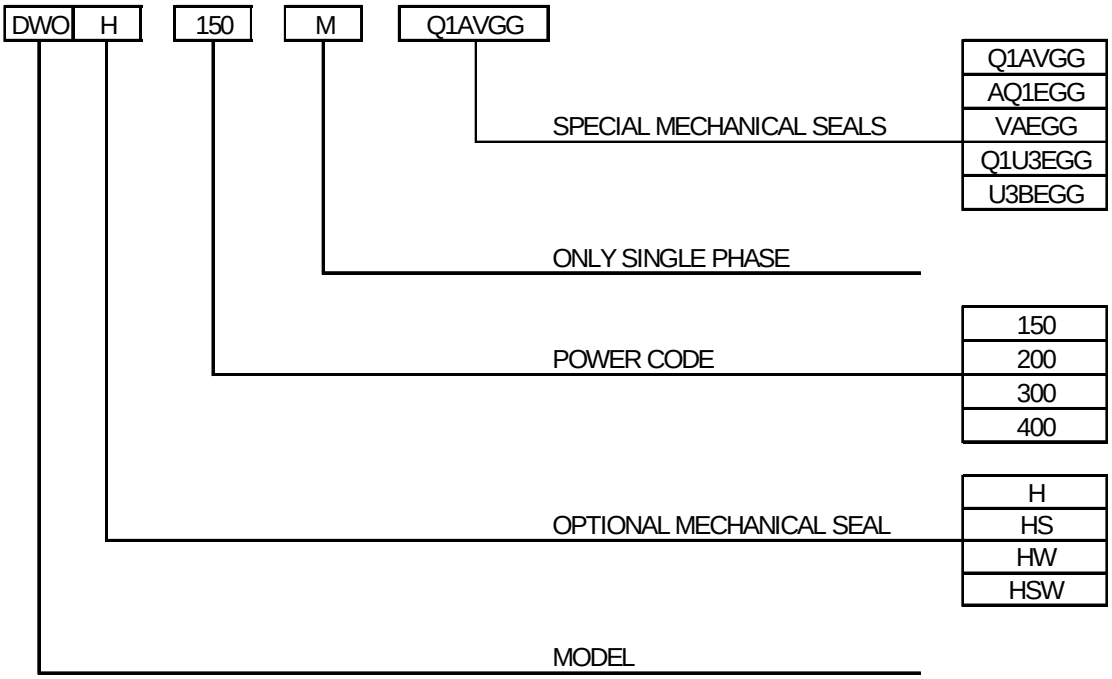

CURVES SPECIFICATIONS

The specifications below qualify the curves shown on the following pages.

Tolerances according to ISO 9906:2012 - Grade 3B
The curves refer to effective speed of asynchronous motors at 50 Hz, 2 poles.
Measurements were carried out with clean water at 20°C of temperature and with a kinematic viscosity of ν = 1 mm^2/s (1 cSt)
The NPSH curve is an average curve obtained in the same conditions of performance curves.
The continuous curves indicate the recommended working range. The dotted curve is only a guide.
In order to avoid the risk of over-heating, the pumps should not be used at a flow rate below 10% of best efficiency point.

Symbols explanation:

Q	=	volume flow rate
H	=	total head
P_2	=	pump power input (shaft power)
η	=	pump efficiency
NPSH	=	net positive suction head required by the pump

PERFORMANCE CURVES

50Hz

Rev.S

DWO 150 - Impeller diameter = 88 mm

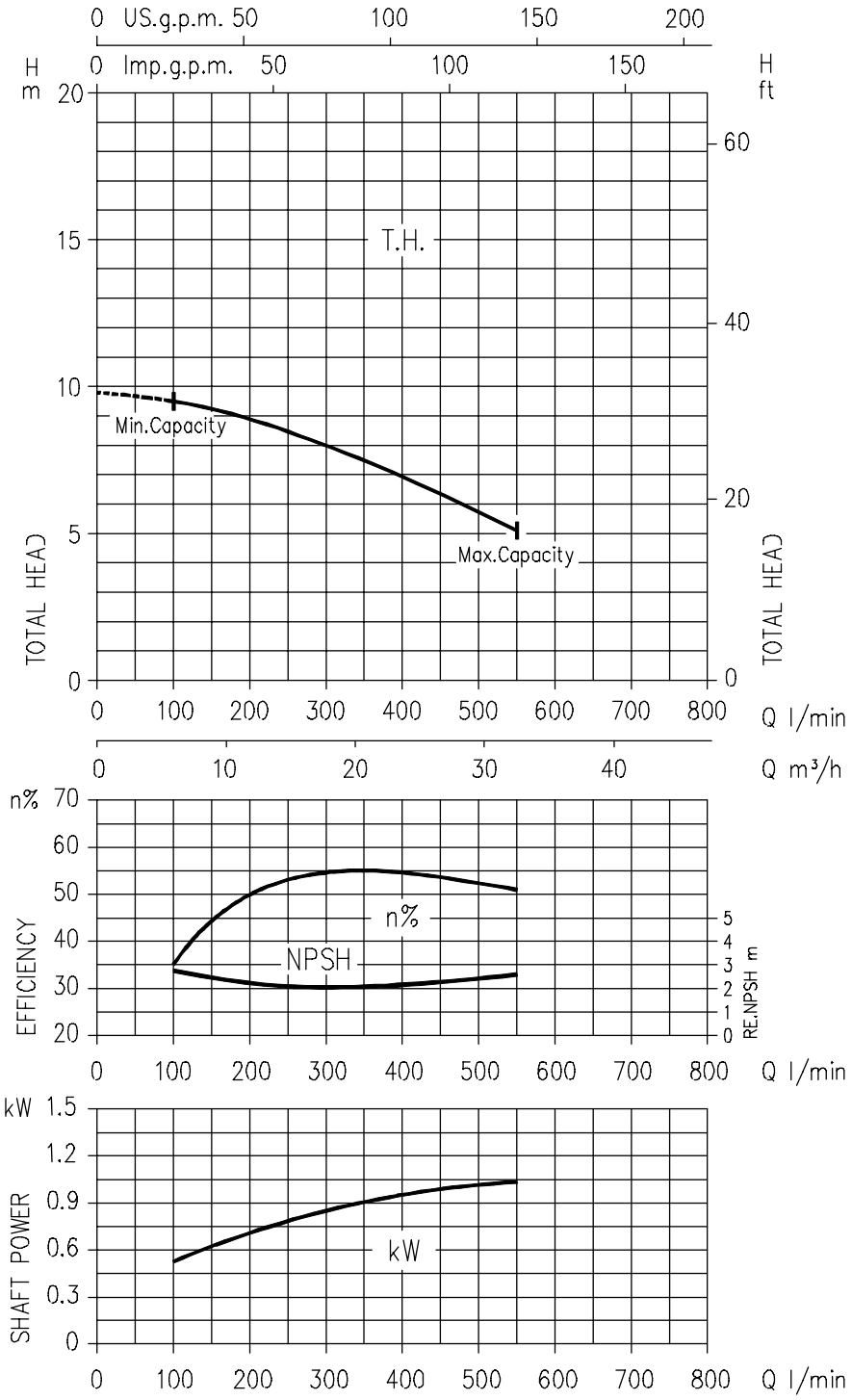

Rotation speed ≈ 2800 min^{-1}
Test standard: ISO 9906:2012 - Grade 3B

PERFORMANCE CURVES

50Hz

Rev.S

DWO 200 - Impeller diameter = 103 mm

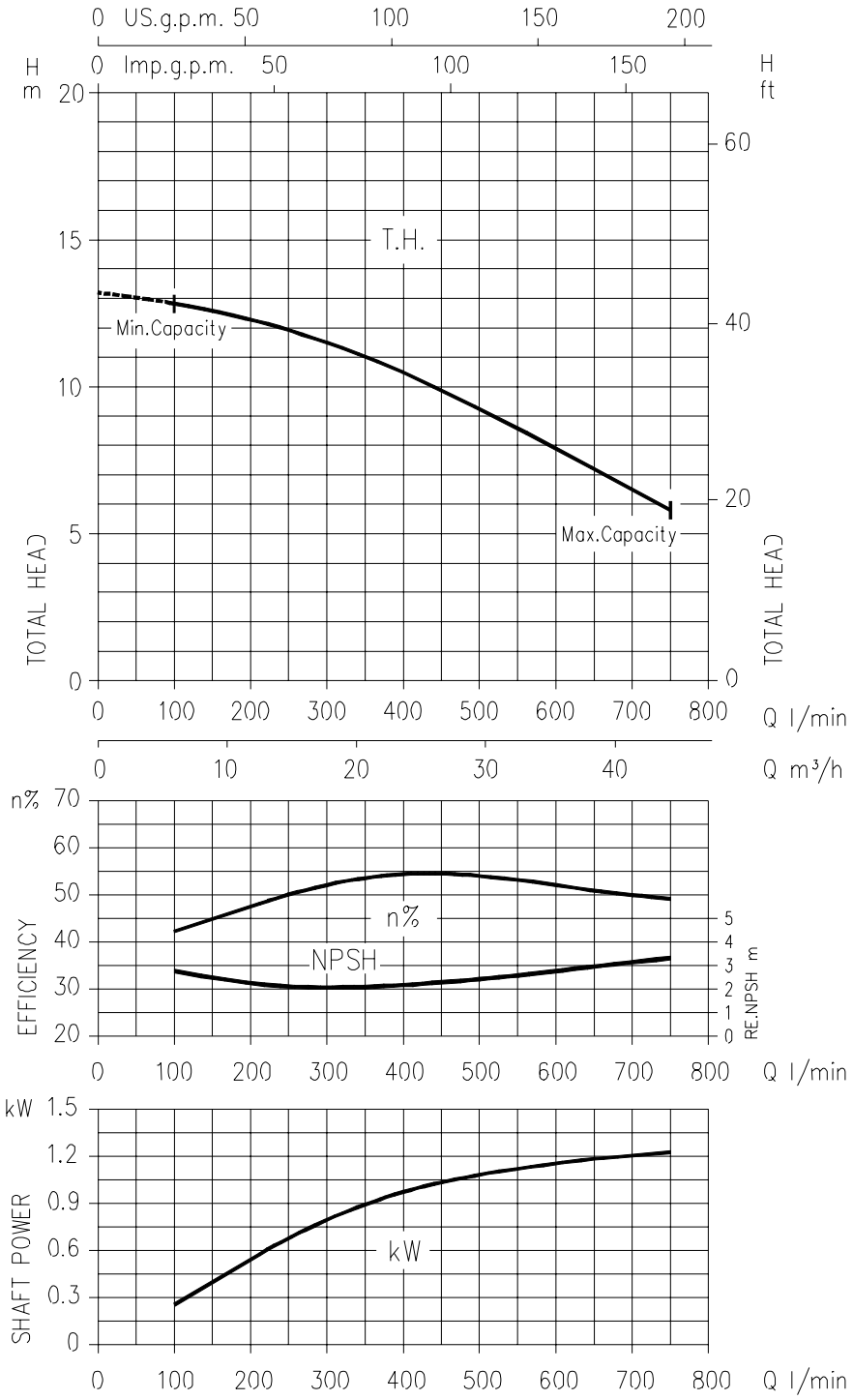

Rotation speed ≈ 2800 min^{-1}
Test standard: ISO 9906:2012 - Grade 3B

PERFORMANCE CURVES

50Hz

Rev.S

DWO 300 - Impeller diameter = 107 mm

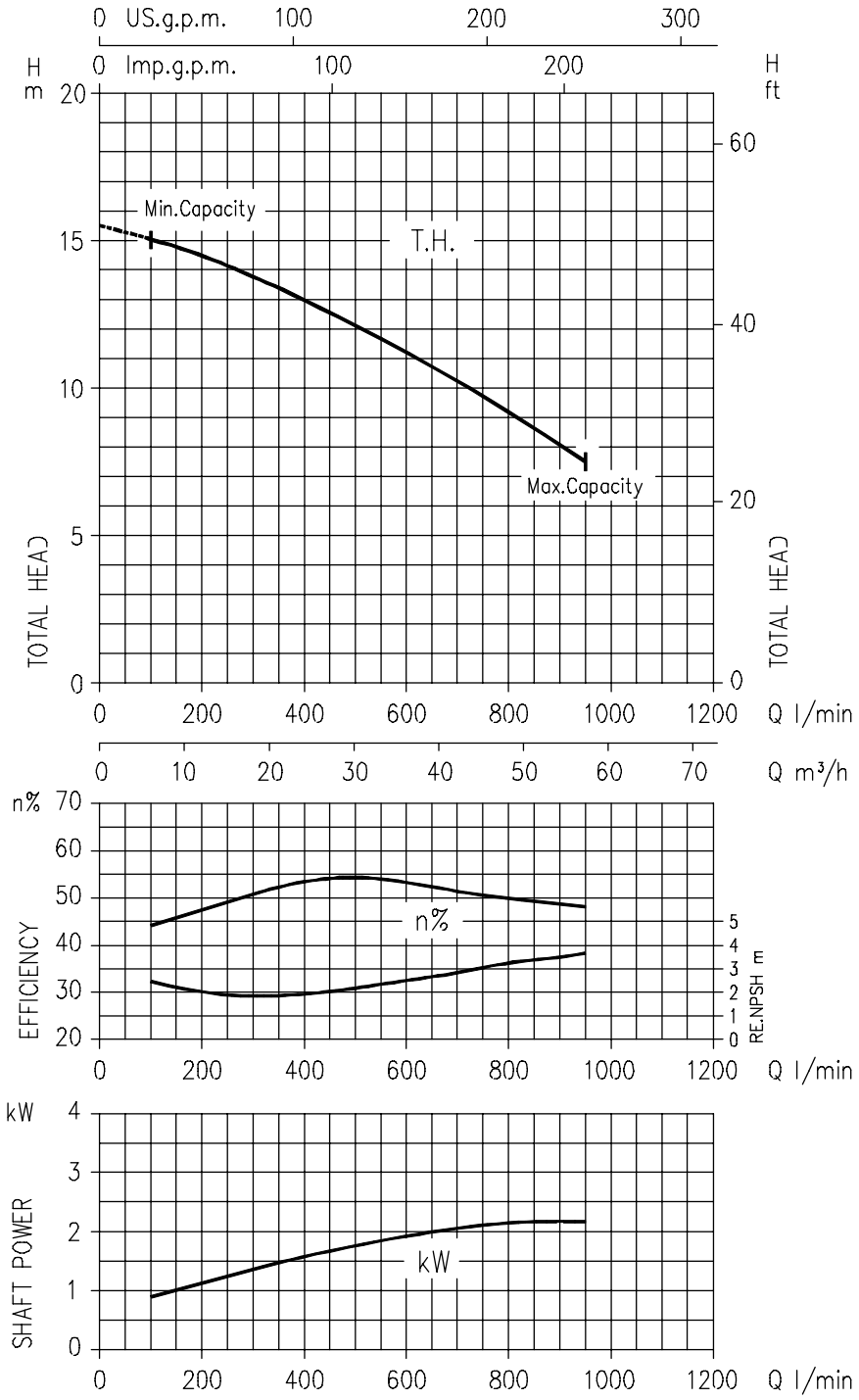

Rotation speed ≈ 2800 min^{-1}
Test standard: ISO 9906:2012 - Grade 3B

PERFORMANCE CURVES

50Hz

Rev.S

DWO 400 - Impeller diameter: 118 mm

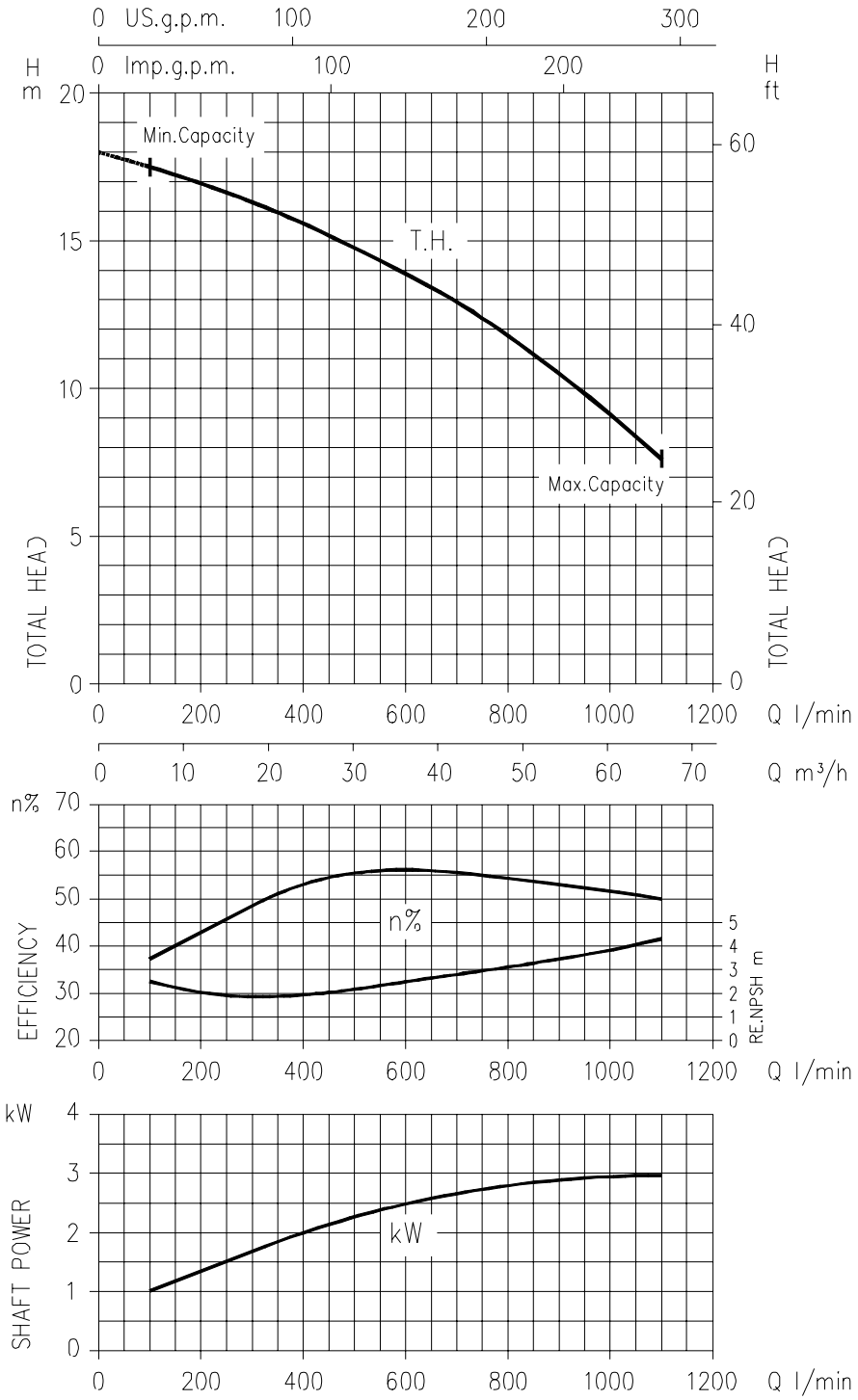

Rotation speed ≈ 2800 min^{-1}
Test standard: ISO 9906:2012 - Grade 3B

CONSTRUCTIONS

50Hz

Rev.S

SECTIONAL VIEW

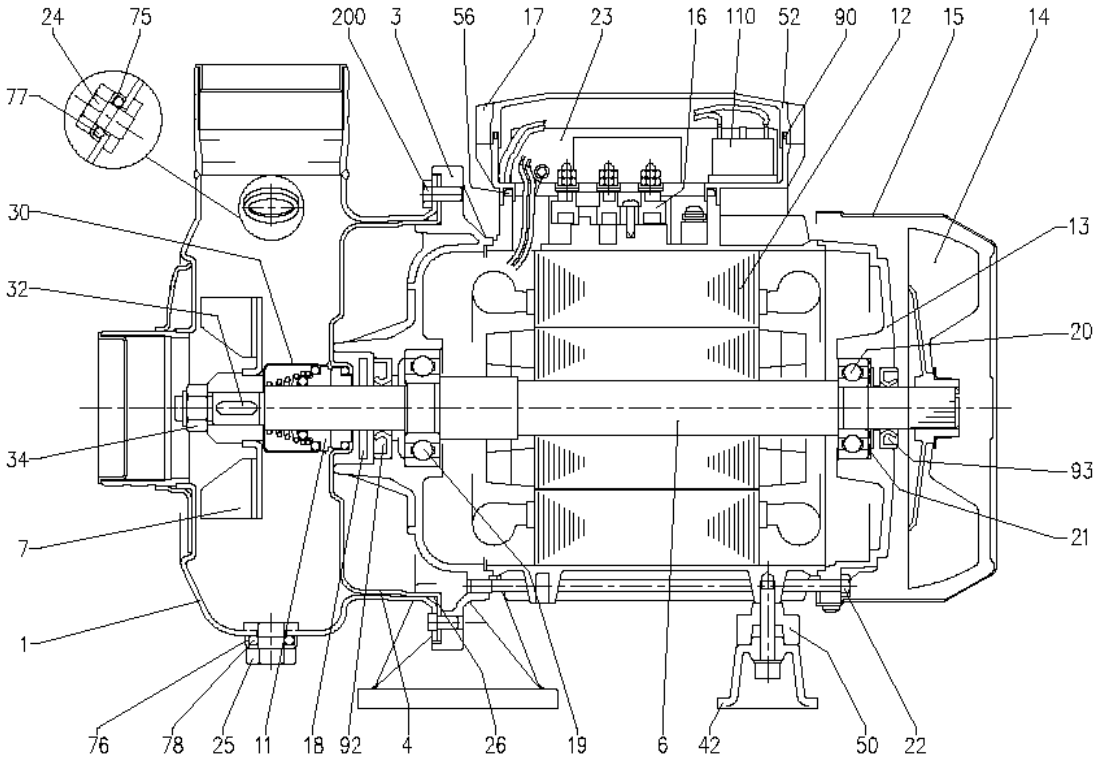

N°	PART NAME	MATERIAL	Q.TY
1	Casing	AISI 304	1
3	Motor bracket	Aluminium	1
4	Casing cover	AISI 304	1
6	Shaft with rotor	AISI 304 (Wet extention)	1
7	Impeller	AISI 304	1
11	Mechanical seal [3]	Carbon/Ceramic/NBR	1
12	Motor frame with stator	-	1
13	Motor cover	Aluminium	1
14	Fan	PP	1
15	Fan cover	Fe P04 Zincate	1
16	Terminal box	-	1
17	Terminal box cover [2]	Aluminium	1
18	Splash ring	NBR	1
19	Pump side ball bearing	-	1
20	Fan side ball bearing	-	1
21	Adjusting ring	Steel C70	1
22	Tie rod	Fe 420 Zincate	4
23	Capacitor [1]	-	1
24	Priming plug	AISI 303	1

N°	PART NAME	MATERIAL	Q.TY
25	Drain plug	AISI 303	1
26	O-ring [4]	NBR/FPM/EPDM	1
30	Mechanical seal protection	AISI 304	1
32	Key	AISI 316	1
34	Impeller nut	AISI 304	1
42	Motor support	Aluminium	1
50	Spacer	-	1
52	Terminal box [1]	PP	1
56	Box gasket	NBR	1
75	Washer	AISI 304	1
76	Washer	AISI 304	1
77	O-ring [4]	NBR/FPM/EPDM	1
78	O-ring [4]	NBR/FPM/EPDM	1
90	Terminal box cover gasket [1]	NBR	1
92	Lip seal	-	1
93	Lip seal	-	1
110	Protector [1]	-	1
200	Screw	Stainless steel A2 UNI7323	6

[1] Only for Single phase
[2] Only for Three phase
[3] See **MECHANICAL SEAL** pages 301, 302
[4] FPM for H-HS-HW-HSW-Q1AVGG (see pages 301, 302)
EPDM for AQ1EGG-VAEGG-Q1U3EGG-U3BEGG (see pages 301, 302)
NBR only for Standard version (see pages 301, 302)

MECHANICAL SEAL

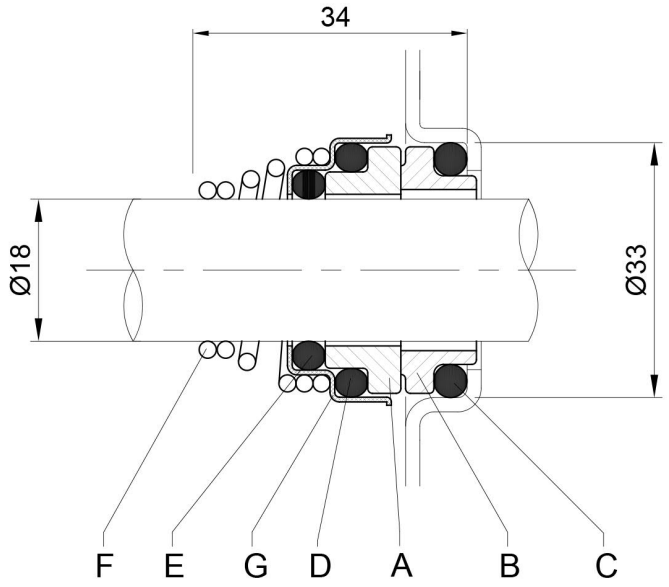

STANDARD

REF	PART NAME	MATERIAL
A	Rotary seal ring	Ceramic
B	Stationary seal ring	Carbon graphite
C	O-ring	NBR
D	O-ring	NBR
E	O-ring	NBR
F	Self driving spring	AISI 316
G	Frame	AISI 304

OPTIONAL

REF	PART NAME	MATERIAL			
		H	**HS**	**HW**	**HSW**
A	Rotary seal ring	Ceramic	Silicon carbide	Tungsten carbide	Silicon carbide
B	Stationary seal ring	Carbon graphite	Silicon carbide	Tungsten carbide	Tungsten carbide
C	O-ring	FPM	FPM	FPM	FPM
D	O-ring	FPM	FPM	FPM	FPM
E	O-ring	FPM	FPM	FPM	FPM
F	Self driving spring	AISI 316	AISI 316	AISI 316	AISI 316
G	Frame	AISI 304	AISI 316	AISI 316	AISI 316

SPECIAL

REF	PART NAME	MATERIAL			
		Q1AVGG	**VAEGG**	**Q1U3EGG**	**U3BEGG**
A	Rotary seal ring	Silicon carbide	Ceramic	Silicon carbide	Tungsten carbide
B	Stationary seal ring	Metallized carbon	Metallized carbon	Tungsten carbide	Graphite
C	O-ring	FPM	EPDM	EPDM	EPDM
D	O-ring	FPM	EPDM	EPDM	EPDM
E	O-ring	FPM	EPDM	EPDM	EPDM
F	Self driving spring	AISI 316	AISI 316	AISI 316	AISI 316
G	Frame	AISI 316	AISI 316	AISI 316	AISI 316

MECHANICAL SEAL

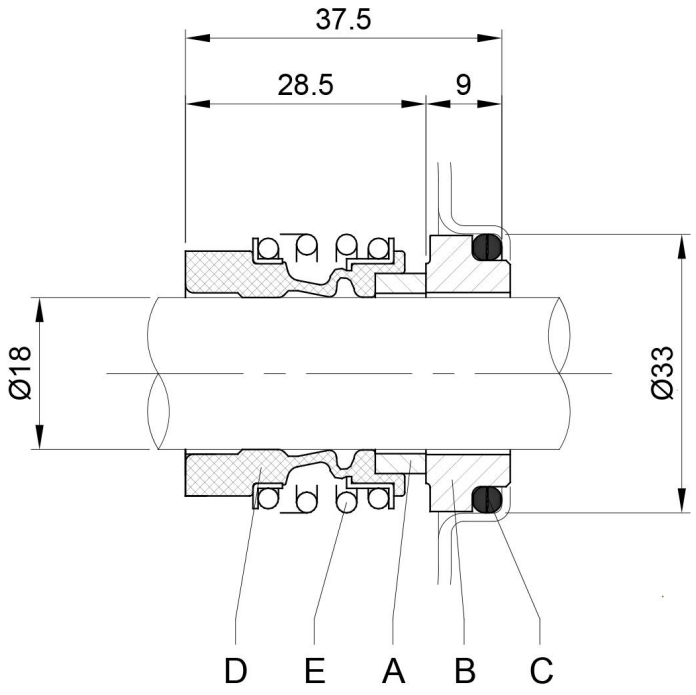

SPECIAL

REF	PART NAME	MATERIAL **AQ1EGG**
A	Rotary seal ring	Metallised carbon
B	Stationary seal ring	Silicon carbide
C	O-ring	EPDM
D	Bellows	EPDM
E	Frame + spring	AISI 316

FLUID TEMPERATURE RANGE

The maximum allowable temperature for the pumped fluid is a determining factor for the operational life of the pump. A primary role in this limitation is played by the materials of the mechanical seals (rings and elastomers), whose thermal resistance often defines the upper limit. The general construction materials of the pump (casing, impeller) and the lubricant used also contribute to defining the maximum temperature. Although the fluid properties and operating conditions have an impact, the choice of suitable seal materials for the operating temperature is crucial to prevent leaks and ensure the reliability of the pumping system.

To preserve optimal performance and prevent failures, we recommend to operate within the following limits:

STANDARD	TEMPERATURE	
mechanical seal	MIN	MAX
STANDARD	-5 °C	90 °C

OPTIONAL	TEMPERATURE	
mechanical seal	MIN	MAX
H *	-5 °C	110 °C
HS *	-5 °C	110 °C
HW *	-5 °C	110 °C
HSW *	-5 °C	110 °C

SPECIAL	TEMPERATURE	
mechanical seal	MIN	MAX
Q1AVGG *	-5 °C	110 °C
AQ1EGG	-5 °C	120 °C
VAEGG	-5 °C	120 °C
Q1U3EGG	-5 °C	120 °C
U3BEGG	-5 °C	120 °C

* in case the pumped fluid is water in combination to FPM elastomers, a maximum temperature fluid of 75°C is recommended in order to guarantee a longer life of the sealing parts

BEARINGS

Pump type		Ball Bearing	
Single Phase	Three Phase	Pump side	Fan side
DWO 150 M	DWO 150	6204	6203
DWO 200 M	DWO 200	6204	6203
-	DWO 300	6204	6203
-	DWO 400	6305	6205

DIMENSIONS and WEIGHT

50Hz

Rev.S

PUMP

[1~] Single phase
DWO 150
DWO 200

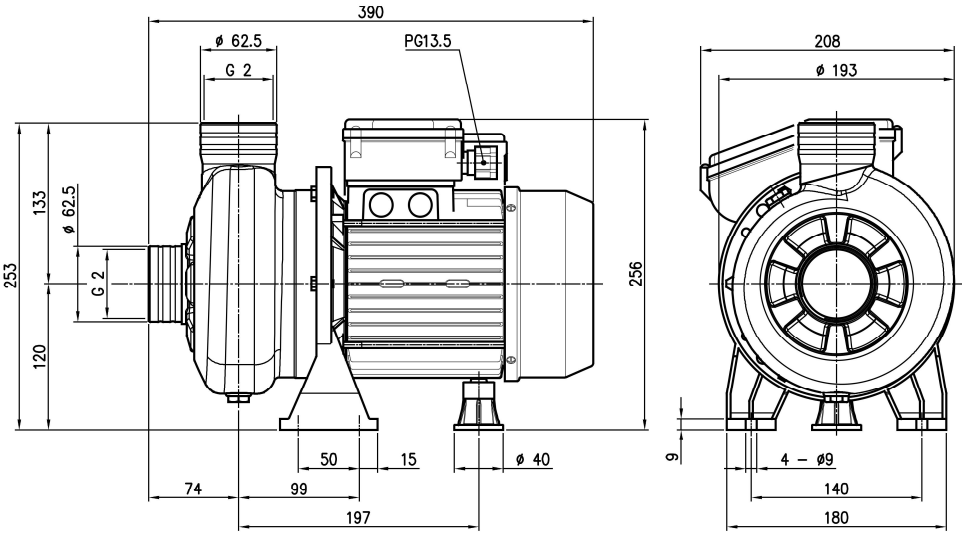

[3~] Single phase
DWO 150
DWO 200
DWO 300
DWO 400

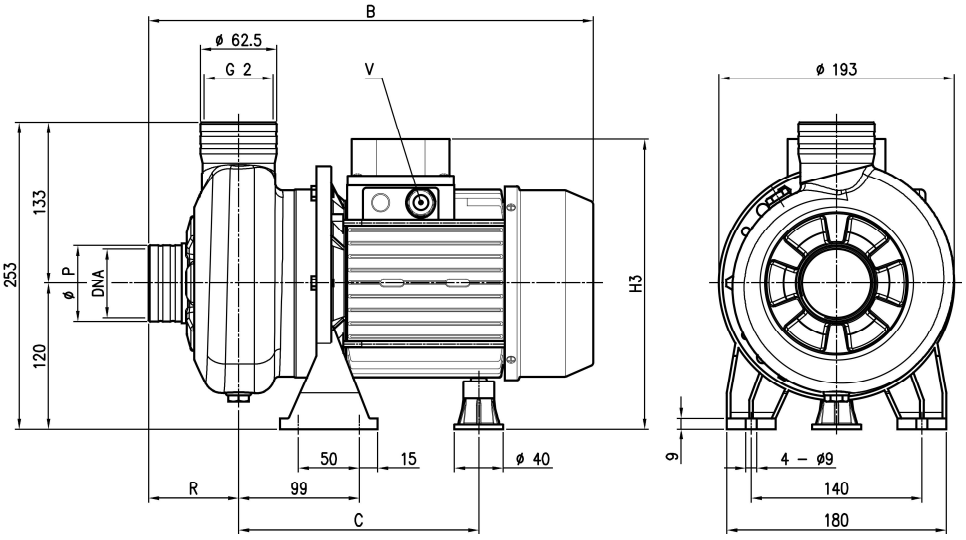

Pump type	Dimensions [mm] B		C	H3	R	P	V	DNA	Weight [kgf]	
	[1~]	[3~]	[3~]	[3~]	[3~]	[3~]	[3~]	[3~]	[1~]	[3~]
DWO 150	390	390	197	239	74	Ø62,5	M20x1.5	G 2	17	15,4
DWO 200	390	390	197	239	74	Ø62,5	M20x1.5	G 2	17,5	17,1
DWO 300	-	395	197	239	78	Ø80	M20x1.5	G 2½	-	19,4
DWO 400	-	455	230/241	244	78	Ø80	M20x1.5	G 2½	-	22,4

[1~] Single phase
[3~] Three phase

GEOMETRIC TOLERANCES

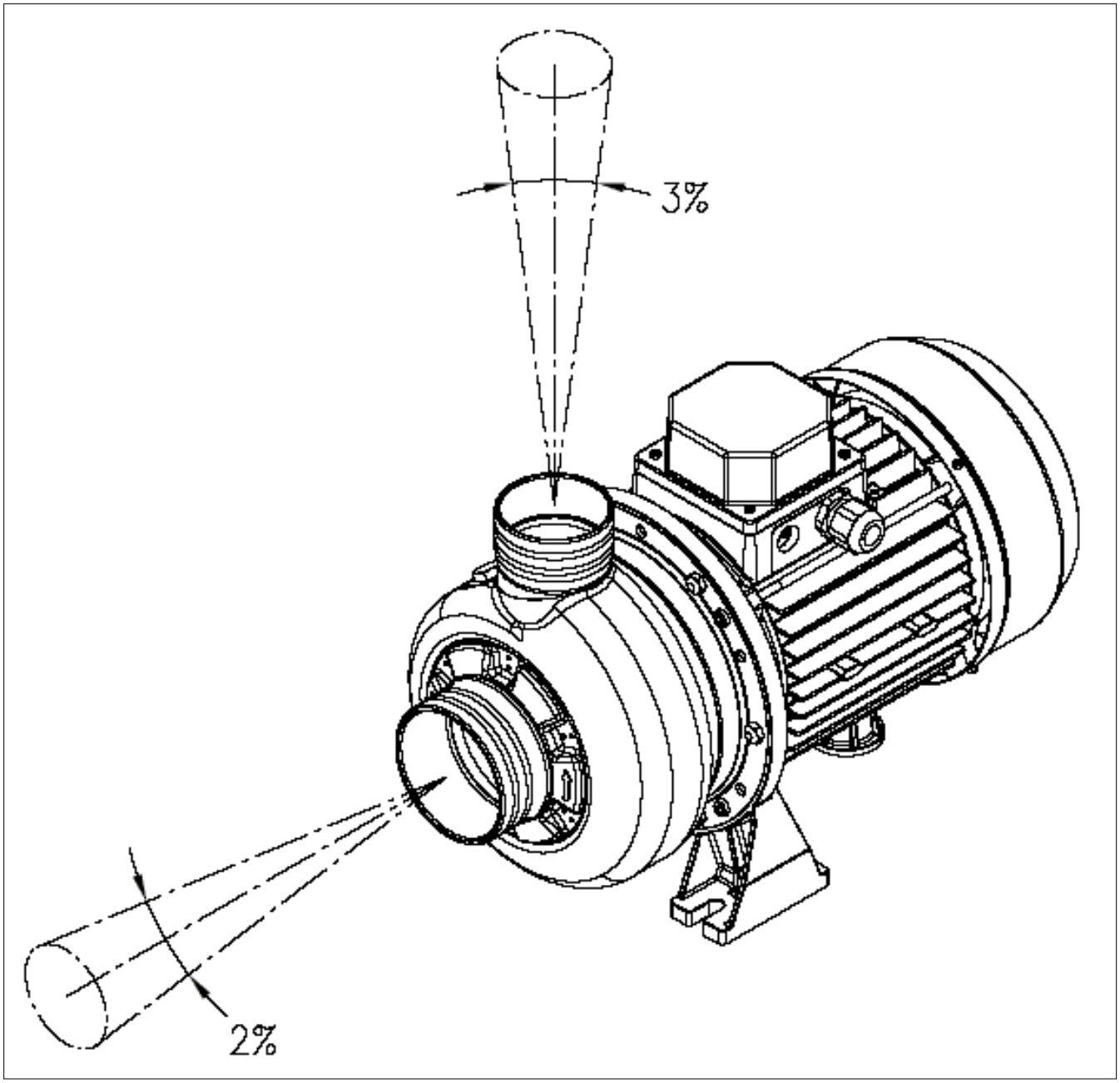

PACKING

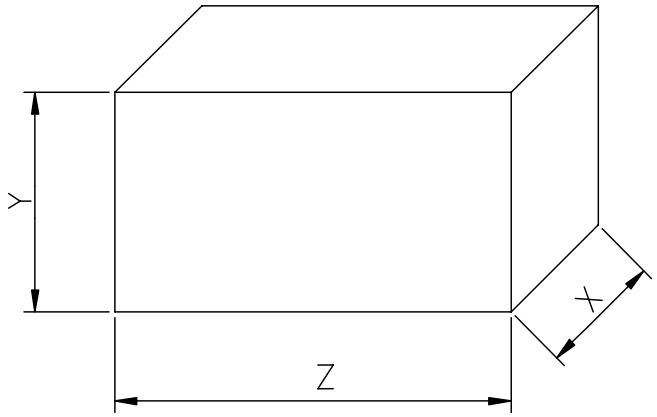

Pump type		Packing [mm]						Weight [kgf]	
		X		Y		Z			
Single Phase	Three Phase	[1~]	[3~]	[1~]	[3~]	[1~]	[3~]	[1~]	[3~]
DWO 150 M	DWO 150	245	245	315	315	590	590	18,5	16,2
DWO 200 M	DWO 200	245	245	315	315	590	590	19	17,9
-	DWO 300	-	245	-	315	-	590	-	20,3
-	DWO 400	-	245	-	315	-	590	-	23,2

[1~] Single phase
[3~] Three phase

TECHNICAL DATA 50Hz

Rev.S

MOTOR DATA

Pump type	Power		Efficiency	Capacitor		Efficiency (% load) and power factor				Input	Full load current		Locked rotor current	
						η %					[A]		[A]	
Single Phase	[kW]	[HP]	[IE]	[μF]	[V]	50%	75%	100%	cos-φ	[kW]	110 V	230 V	110 V	230 V
DWO 150 M	1,5	2,0	IE2	40	450	69,8	76,6	81,3	0,92	1,90	-	9,0	-	65,2
DWO 200 M	1,8	2,4	IE2	40	450	73,1	78,8	82,2	0,93	2,20	-	10,5	-	65,2

Pump type	Power		Efficiency	Efficiency (% load)			Input	Full load current		Locked rotor current	
				η %			[kW]	[A]		[A]	
Three Phase	[kW]	[HP]	[IE]	50%	75%	100%		230 V	400 V	230 V	400 V
DWO 150	1.1	1.5	IE3	83.5	84.3	84.6	1.77	5.8	3.3	47.4	27.4
DWO 200	1.5	2.0	IE3	82.7	86.1	87.0	1.72	6.6	3.8	66.6	38.4
DWO 300	2.2	3.0	IE3	86.2	87.0	86.0	2.55	8.2	4.7	66.6	38.4
DWO 400	3.0	4.0	IE3	85.9	87.5	87.1	3.44	11.1	6.4	90.0	52.0

NOISE DATA

Pump type		L_{pA} - dB(A) *
Single Phase	Three Phase	
DWO 150 M	DWO 150	<70
DWO 200 M	DWO 200	
-	DWO 300	
-	DWO 400	

* Mean value of several measures at 1m distance around
Tollerance ± 2.5 dB.

EBARA Pumps Europe S.p.A. reserves the right to make modifications without prior notice: all specifications could be subject to change

04/24

EBARA Pumps Europe S.p.A.
Via Torri di Confine 2/1 int. C
36053 Gambellara (Vicenza), Italy
Phone +39 0444 706811
ebarapumps.epe@ebara.com
www.ebaraeurope.com

EBARA Pumps Europe S.p.A. GERMANY
Elisabeth-Selbert-Straße 2
63110 Rodgau, Germany
Phone +49 (0) 6106-660 99-0
info.epde@ebara.com

EBARA Pumps South Africa (PTY) LTD
26 Kyalami Boulevard,
Kyalami Business Park, 1684, Midrand,
Gauteng, South Africa
Phone +27 11 466 1844
ebara.epsa@ebara.com

EBARA Pumps Europe S.p.A. UK
Unit A, Park 34
Collett Way - Didcot
Oxfordshire - OX11 7WB, United Kingdom
Phone +44 1895 439027
marketing.epuk@ebara.com

EBARA Pumps Europe S.p.A. FRANCE
122, Rue Pasteur
69780 Toussieu, France
Phone: +33 04 72 76 94 82
mktg.efr@ebara.com

EBARA Pumps East Africa
Delta Corner Tower 2, 13th Floor, Office 1308,
Chiromo Road, Westlands
P.O. Box 13796-00800, Nairobi
Phone: +254(0)722913119
info.epea@ebara.com

EBARA POMPY POLSKA Sp. z o.o.
ul. Działkowa 115 A
02-234 Warszawa, Poland
Phone +48 22 3909920
marketing.epl@ebara.com

EBARA Pumps RUS Ltd.
Prospekt Andropov 18, building 7, floor 11
115432 Moscow
Phone +7 499 6830133
mktg.epr@ebara.com