Looking ahead,
going beyond expectations

Ahead Beyond

EBARA

HYDROSTATION

Data Book 50/60Hz

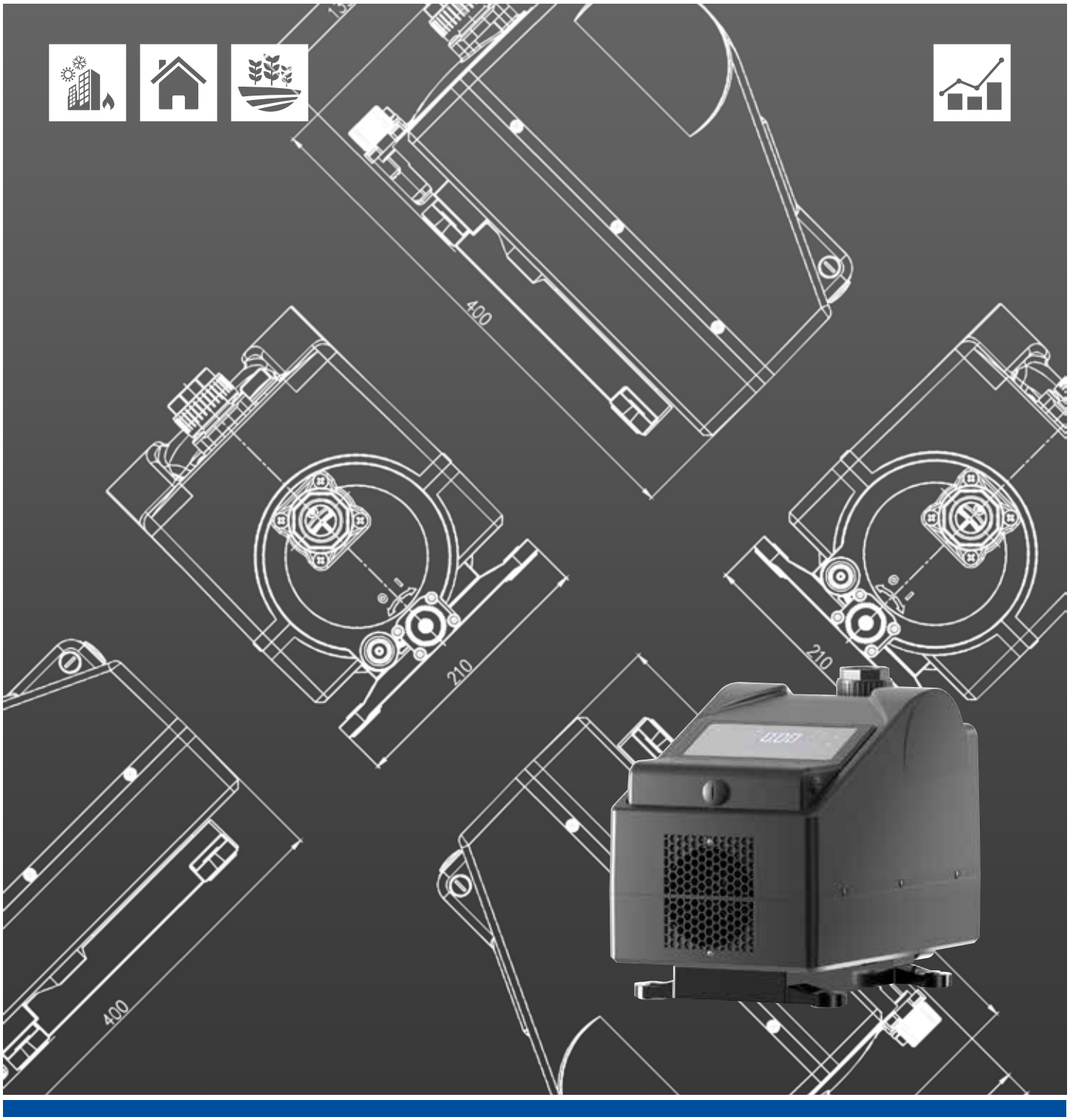

CONTENTS

INDEX

DEFINITION AND USE OF PRESSURISATION UNITS **3**
TYPICAL APPLICATIONS **3**
OPERATING CONDITIONS **3**
TESTS AND TRIALS 3
MECHANICAL AND HYDRAULIC TESTS 3
ELECTRICAL TESTS 4
Principle of Operation of the booster set Hydrostation. 4
PRODUCT SPECIFICATIONS **5**
CURVE SPECIFICATIONS **6**
PERFORMANCE RANGE **7**
PERFORMANCE CHART 7
DIMENSIONS AND WEIGHT **8**
HYDROSTATION 8
HYDROSTATION TWIN 9
HYDROSTATION TWIN MANIFOLD KIT 10

EBARA Pumps Europe reserves the right to make modifications without prior notice

DEFINITION AND USE OF PRESSURISATION UNITS

In situations in which a municipal water mains is lacking or insufficient for the proper operation of the services, one must install a pressurization unit to provide acceptable pressure and flow rates to even in the most unfavourable services. Pressurisation units are used wherever there is a need to increase the pressure, or to pressurise a water circuit. **EBARA HYDROSTATION pressurisation unit** is an automatic system with a pump designed to provide a simple and reliable solution to the most common requirements for maintenance of water supply pressure for apartment buildings, centres, offices and schools as well as providing auxiliary service in agricultural applications. They stand out for their robust construction, compact size, excellent efficiency and silent operation. Hydrostation is equipped with INVERTER and controlled by pressure transmitter and an integrated airless buffer tank.

TYPICAL APPLICATIONS

BUILDING SERVICE	RESIDENTIAL	AGRICULTURE
		

OPERATING CONDITIONS

EBARA HYDROSTATION pressurisation units can be used, in their standard versions, for civil, industrial and agricultural applications, as follows:

- building service
- water lifting and handling
- irrigation

The conveyed fluid must be: clean, potable, ground or mixed water, free of solid or fibrous suspensions and aggressive chemical substances.
The units must be installed under cover, protected from the weather and freezing.

- Conveyed water temperature 5÷45°C
- Ambient operating temperature 5÷50°C, no higher than 1000 m above sea level.
- Max relative humidity 60% at 45°C.

TESTS AND TRIALS

Before shipping, all EBARA pressurisation units are subject to hydraulic, mechanical and electrical testing.

MECHANICAL AND HYDRAULIC TESTS

- Pump direction of rotation
- Mechanical testing of moving parts and running noise

EBARA Pumps Europe reserves the right to make modifications without prior notice

ELECTRICAL TESTS ON THE PUMP

- Earthing system continuity
- Applied voltage (dielectric rigidity)
- Insulation resistance

PRINCIPLE OF OPERATION OF HYDROSTATION

The unit is designed to operate as an integrated system that includes pump, permanent magnet synchronous motor and variable speed drive. Depending on water demand the unit operates in variable frequency mode to maintain constant pressure water supply.

EBARA Pumps Europe reserves the right to make modifications without prior notice

HYDROSTATION

TECHNICAL DATA

Rev. C

PRODUCT SPECIFICATIONS

HYDROSTATION			
Operating range	Liquid Handled [type]		Clean water
	Temperature [C°]	Liquid	min +5 max +45
		Ambient	min +5 max +50 (+55 for HYDROSTATION SA)
	Maximum working pressure [Mpa]		1
	Nominal flow rate [m^3/h]		5,6
	Maximum suction depth [m]		6
Pipe connection	Suction		GF 1"
	Discharge		GF 1"
Material	Casing cover		Nylon PA6 GF 30%
	Impeller		PPO + GF 20%
	Diffuser		PPO + GF 20%
	Pump Shaft		Stainless Steel AISI 304
	Mechanical Seal		Graphite/silicon carbide/EPDM
	O-rings		EPDM/NBR
Motor data	Voltage [Vac]		220/240
	Acceptable voltage fluctuation		± 15%
	Maximum current [A]		4,6
	Power rating	[kW]	0,8
		[HP]	1
	Expected Cosφ		0,8
	Motor Efficiency		95%
	Protection degree		IP65
	Efficiency Class		IE5
	Noise Level [dBA]		<43
Applicable standard of test			ISO 9906:2012 - Grade 3B

EBARA Pumps Europe

EBARA Pumps Europe reserves the right to make modifications without prior notice

EBARA

CURVE SPECIFICATIONS

The specifications below qualify the curves shown on the following pages.
Tolerances according to ISO 9906:2012 – Grade 3B.
Measurements were carried out with clean water at 20°C of temperature and with a kinematic viscosity of v = 1 mm2/s (1 cSt).
The NPSH curve is an average curve obtained in the same conditions of performance curves.
During the pump selection, consider to get a safety margin of at least 0.5 m.
The continuous curves indicate the recommended working range. The dotted curve is only a guide.
In order to avoid the risk of over-heating, the pumps should not be used at a flow rate below 10% of best efficiency point.

Symbols explanation:

Q = volume flow rate
H = total head
P2 = pump power input (shaft power)
η = pump efficiency
NPSH = net positive suction head required by the pump

Pressure drops of the unit's fittings are not considered

EBARA Pumps Europe reserves the right to make modifications without prior notice

HYDROSTATION

PERFORMANCE CURVE

Rev. C

PERFORMANCE RANGE

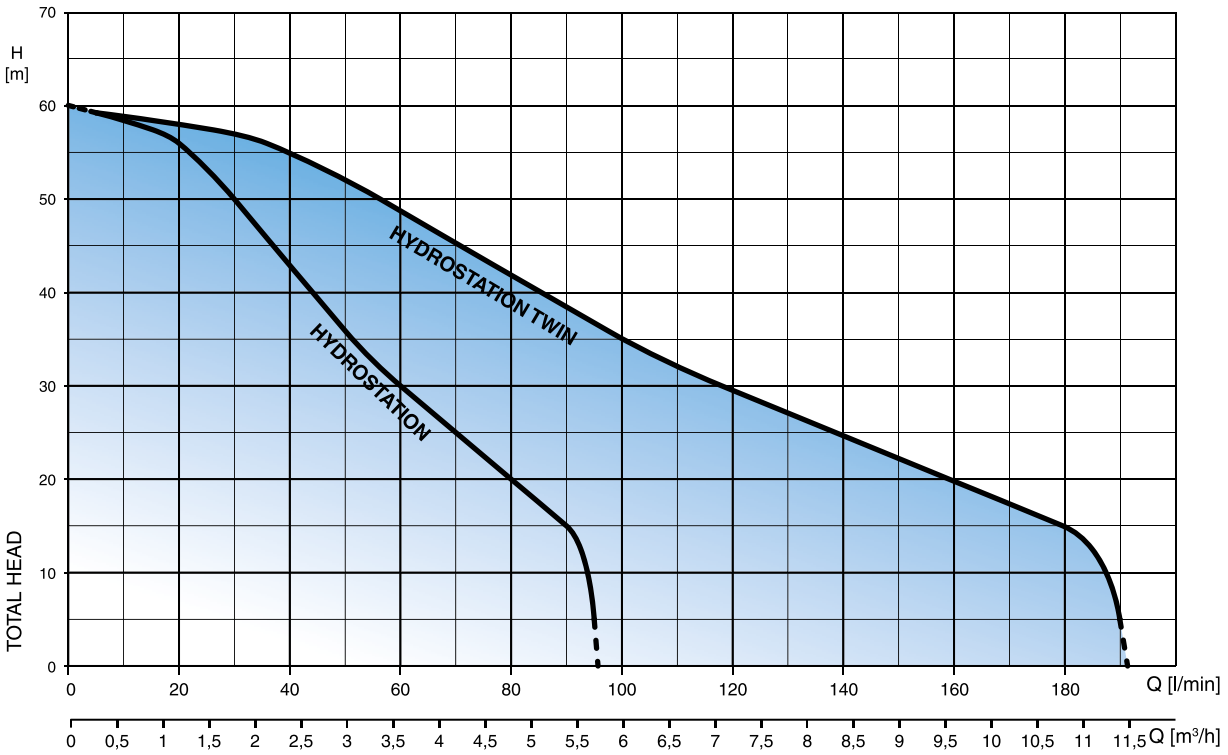

SELECTION CHART

Model	Motor		Q= Capacity										
			l/min	0	10	20	30	40	50	60	70	80	90	95
	kW	HP	m³/h	0	0,6	1,2	1,8	2,4	3	3,6	4,2	4,8	5,4	5,7
			H= Total manometric head in meters											
HYDROSTATION	0,8	1		60	58,5	56	50	43	36	30	25	20	15	5

Model	Motor		Q= Capacity										
			l/min	0	20	40	60	80	100	120	140	160	180	190
	kW 2x	HP 2x	m³/h	0	1,2	2,4	3,6	4,8	6	7,2	8,4	9,6	10,8	11,4
			H= Total manometric head in meters											
HYDROSTATION TWIN	0,8	1		60	58,5	56	50	43	36	30	25	20	15	5

EBARA Pumps Europe reserves the right to make modifications without prior notice

HYDROSTATION

DIMENSIONS AND WEIGHT

Rev. C

HYDROSTATION
PRODUCT DIMENSIONS

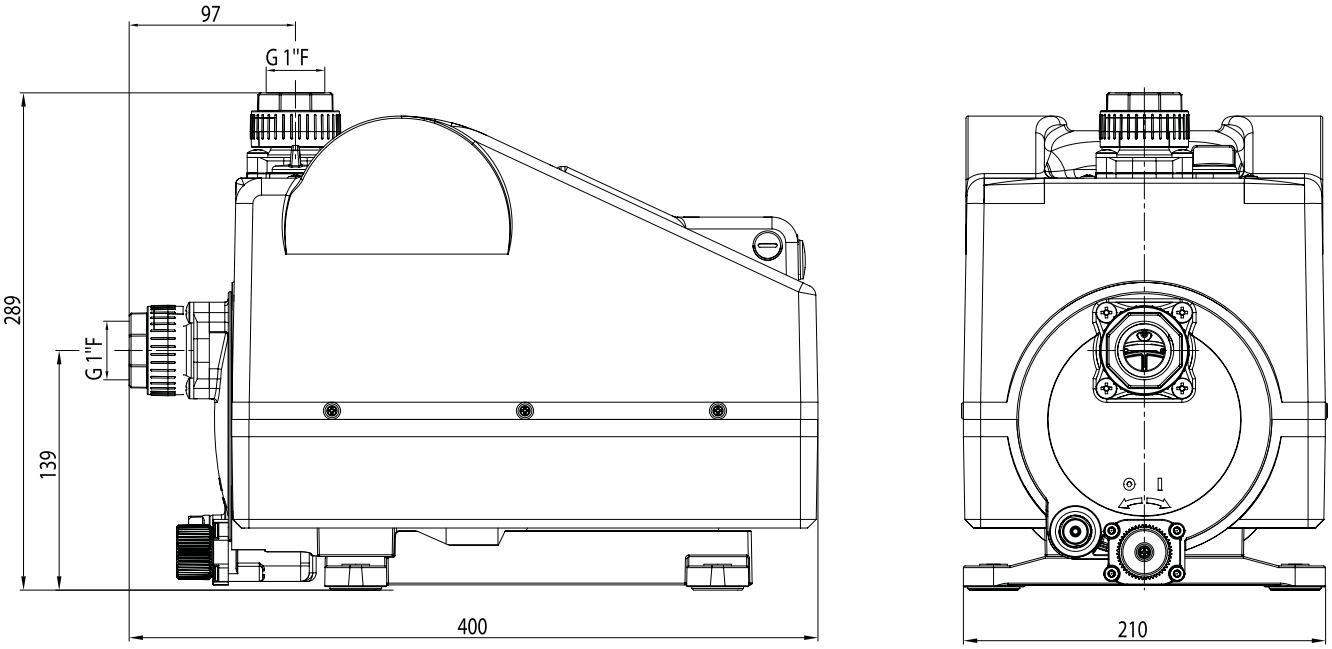

PACKAGING DIMENSIONS

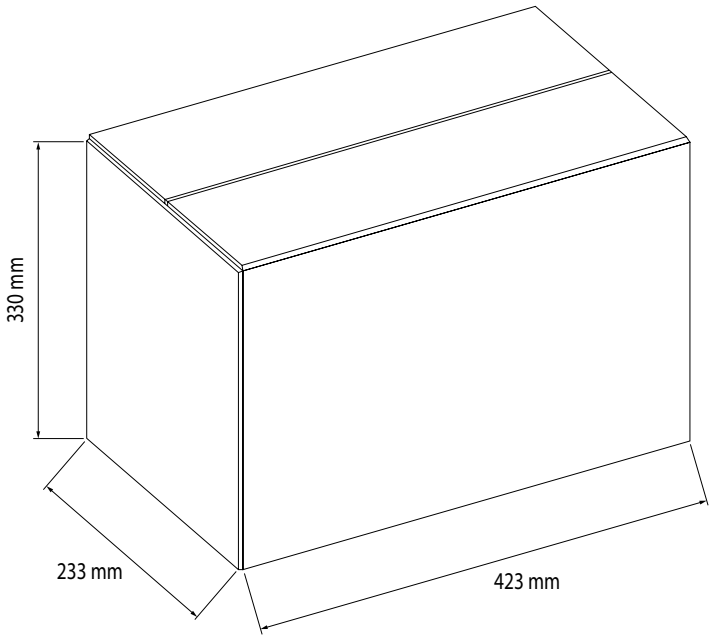

Weight: 13,5 Kg

The dimensions may change without notice.

EBARA Pumps Europe

EBARA Pumps Europe reserves the right to make modifications without prior notice

HYDROSTATION TWIN
PRODUCT DIMENSIONS

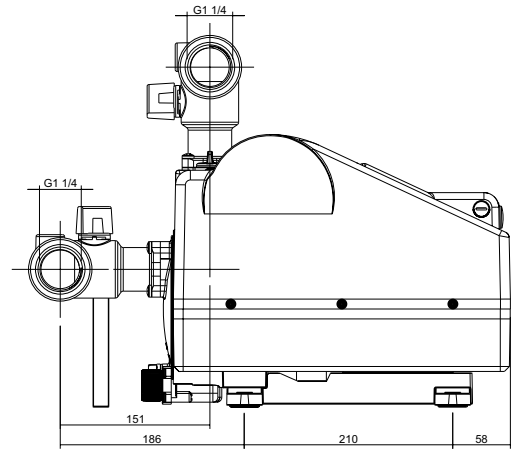

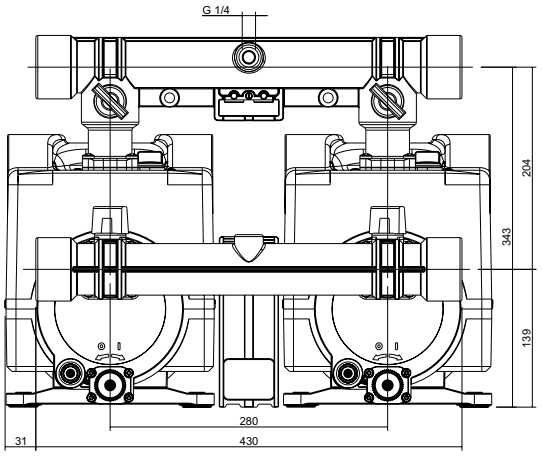

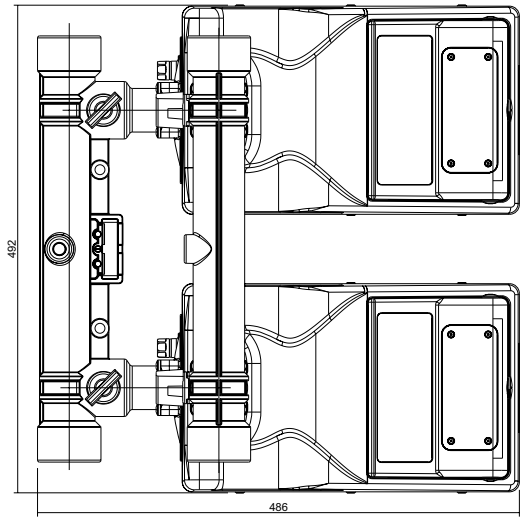

The dimensions may change without notice.

EBARA Pumps Europe reserves the right to make modifications without prior notice

HYDROSTATION MANIFOLD KIT
PRODUCT DIMENSIONS

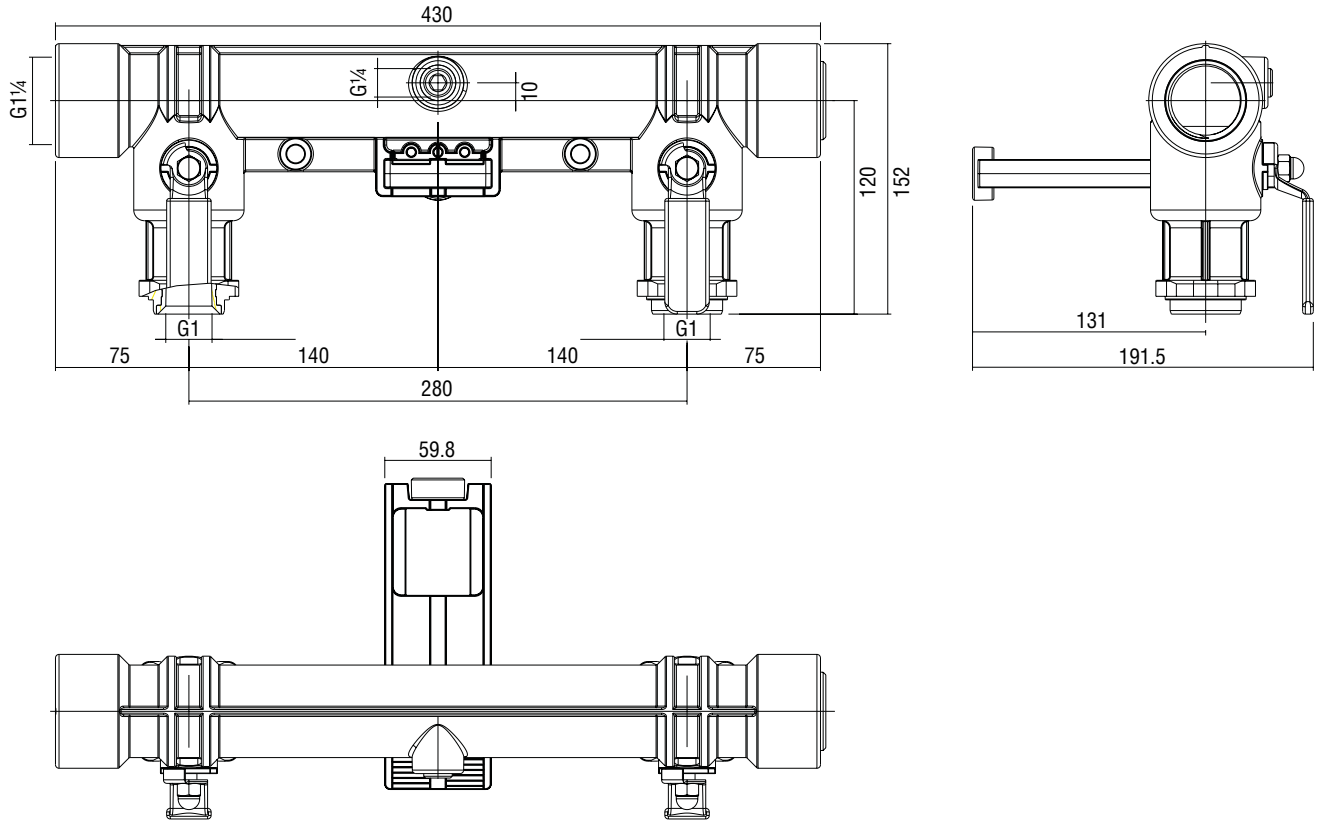

PACKAGING DIMENSIONS

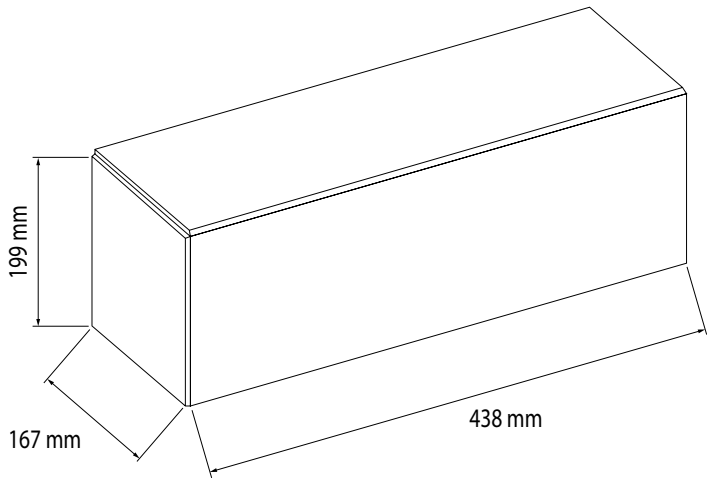

The dimensions may change without notice.

EBARA Pumps Europe

EBARA Pumps Europe reserves the right to make modifications without prior notice

The contents of this publication shall not be regarded as binding.
EBARA Pumps Europe S.p.A. reserves the right to make any changes it deems appropriate without prior notice.

REV.C 03/25

EBARA Pumps Europe S.p.A.
Via Torri di Confine 2/1 int. C
36053 Gambellara (Vicenza), Italy
Tel. +39 0444 706811
ebarapumps.epe@ebara.com
www.ebaraeurope.com

EBARA Pumps Europe S.p.A. UK
Unit A, Park 34
Collett Way - Didcot
Oxfordshire - OX11 7WB, United Kingdom
Tel. +44 1895 439027
marketing.epuk@ebara.com

EBARA POMPY POLSKA Sp. z o.o.
ul. Działkowa 115 A
02-234 Warszawa, Poland
Tel. +48 22 3909920
marketing.epl@ebara.com

EBARA Pumps Europe S.p.A. GERMANY
Elisabeth-Selbert-Straße 2
63110 Rodgau, Germany
Tel. +49 (0) 6106-660 99-0
info.epde@ebara.com

EBARA Pumps Europe S.p.A. FRANCE
122, Rue Pasteur
69780 Toussieu, France
Tel.: +33 04 72 76 94 82
mktg.efr@ebara.com

EBARA Pumps Europe Nordic
Gustav III Boulevard 34,
169 73 Solna, Sweden
info.epen@ebara.com

EBARA Pumps South Africa (PTY) LTD
26 Kyalami Boulevard,
Kyalami Business Park, 1684, Midrand,
Gauteng, South Africa
Tel. +27 11 466 1844
ebara.epsa@ebara.com

EBARA Pumps East Africa
Delta Corner Tower 2, 13th Floor, Office 1308,
Chiromo Road, Westlands
P.O. Box 13796-00800, Nairobi
Tel.: +254(0)722913119
info.epea@ebara.com

EBARA West Africa Limited
ewasales.epe@ebara.com